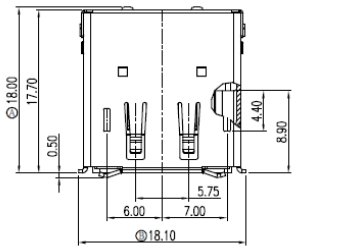

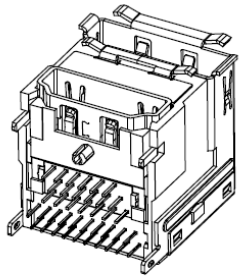

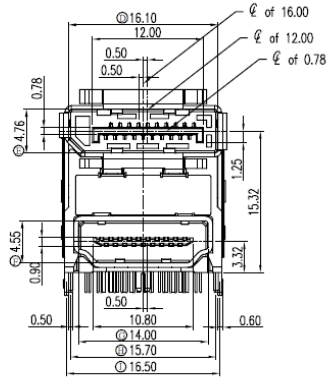

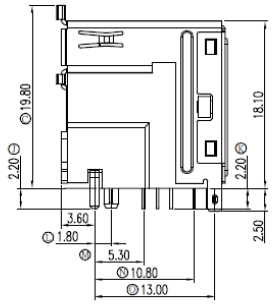

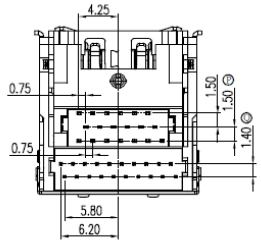

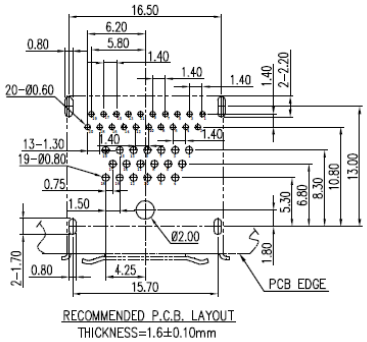

RoHS compliant

SPECIFICATIONS

Displayport

Voltage:	40 VAC (RMS) Max
Current Rating:	0.5 Ampere per Contact
Contact Resistance:	30 Milliohms Max.
Insulation Resistance:	100 Megohms Min.
Withstanding:	500V DC
Mating Force:	4.5 Kgf Max.
Unmating Force:	1.0 Kgf Min.
Operating Temp:	-25C to +85C

HDMI

Voltage:	40VAC (RMS) Max.
Current Rating:	0.5 Amp per Contact
Contact Resistance:	30 Milliohms Max.
Insulation Resistance:	100 Megohms Min.
Withstanding:	500V DC (RMS)
Total Mating Force:	4.5 Kgf Max.
Total Unmating Force:	1.0 Kgf Min.
Operating Temp:	-25C to +85C

Housing (DP):	PBT UL94V-0, Black
Housing (HDMI):	LCP, UL94V-0, Black
Terminal:	Copper Alloy
Shell (DP):	Copper Alloy
Shell (HDMI):	Copper Alloy
Shield:	SPCC

Finish

Terminal (DP):	Gold over Nickel on Contact Tin over Nickel on Solder
Terminal (HDMI):	Gold over Nickel
Shell:	Nickel Plated

Rev.	Description	Date	Approved	Drawing	Name	Date
				Approved	Howard	03/29/08
				Checked	Lizzy	03/29/08
				Drawn	Tina	03/29/08
				0.0 ± 0.35	0.00 ± 0.20	Angles ± 3°
				UNIT: mm		

Central Components Manufacturing
440 Lincoln Blvd., Middlesex, New Jersey 08846
Phone 732 469-5720 888 288-5152 Fax 732 469-1919

Part No.: DCP-HDMI-01X2201AN0

Description: Displayport / HDMI Combo Receptacle DIP Type