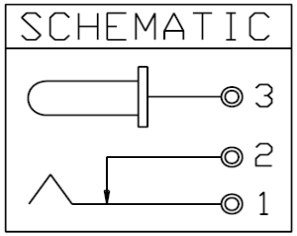

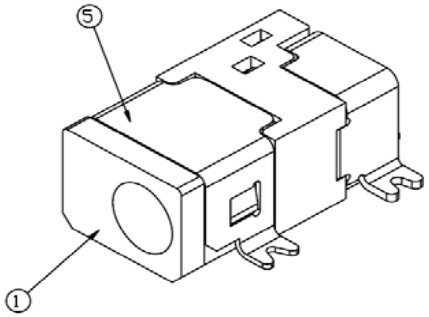

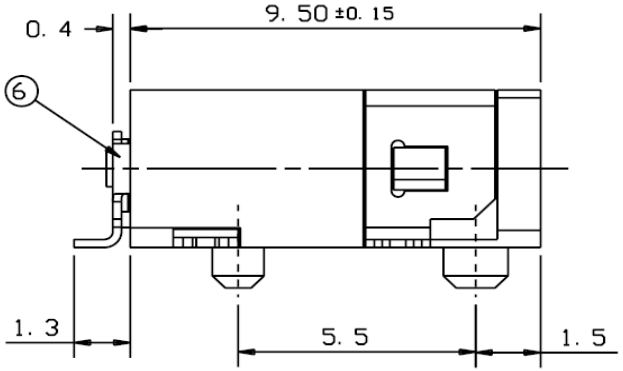

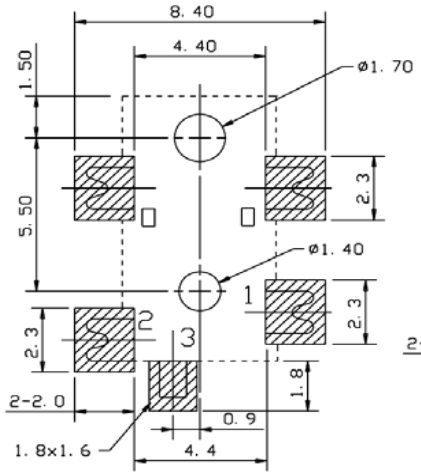

Recommended PAD Layout
(Component Side)

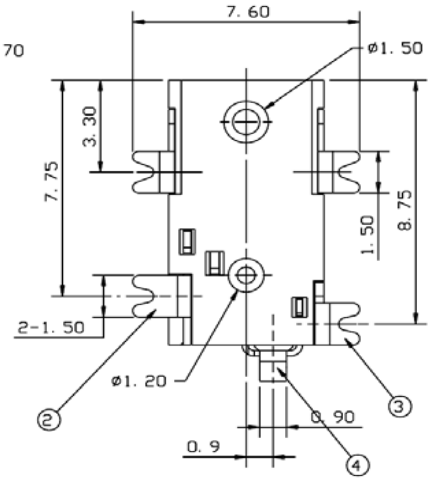

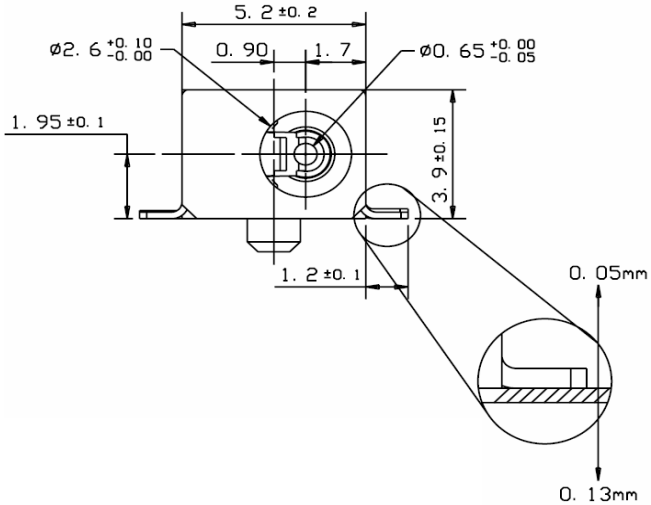

SPECIFICATIONS

Contact pin material:	Brass
Shunt terminal material:	Brass
SPG contact material:	Beryllium copper
Housing material:	LCP

Series	Type	Center Pin	Plating
DCJ	AJ239	H	GD
DC jack	Side entry, very low profile	H=0.65	Gold plating on center pin

RoHS compliant

Rev.	Description	Date	Approved	Drawing	Name	Date
				Approved	Howard	08/10/99
				Checked	Lizzy	08/10/99
				Drawn	Tina	08/10/99
				0.0 ± 0.35	0.00 ± 0.20	Angles ± 3'
				UNIT: mm		

Central Components Manufacturing
440 Lincoln Blvd., Middlesex, New Jersey 08846
Phone 732 469-5720 888 288-5152 Fax 732 469-1919

Part No.: **DCJ-AJ239-H-GD**

Description: DC power jack, very low profile