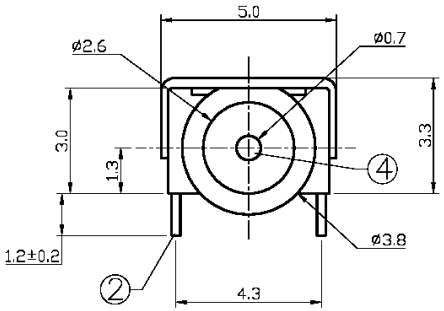

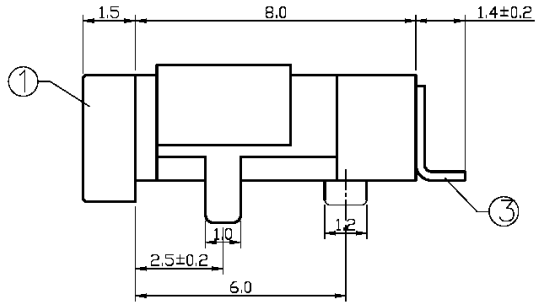

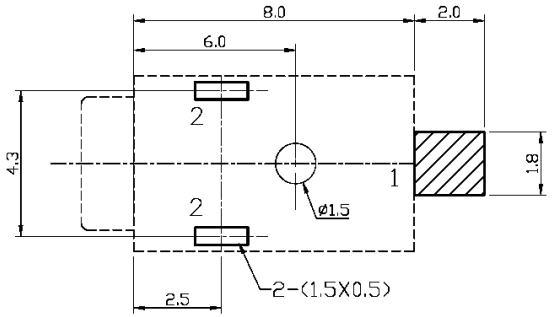

T:1.6 Dimensions of PC board holes

Tolerance : ±0.1(Printed-top view)

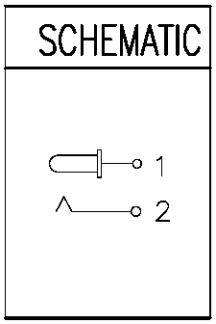

Item	Name	Material	Finish
1	Housing	PA46	
2	Spring	Beryllium copper	Gold
3	Curved piece	Bronze	Gold
4	Pin	Brass	Nickel

RoHS compliant

Rev.	Description	Date	Approved	Drawing	Name	Date
				Approved	Howard	02/17/06
				Checked	Lizzy	02/17/06
				Drawn	Tina	02/17/06
				0.0 ± 0.35	0.00 ± 0.20	Angles ± 3'
				UNIT: mm		

Central Components Manufacturing
440 Lincoln Blvd., Middlesex, New Jersey 08846
Phone 732 469-5720 888 288-5152 Fax 732 469-1919

Part No.: **DCJ-242A-S-SMT**

Description: DC power jack