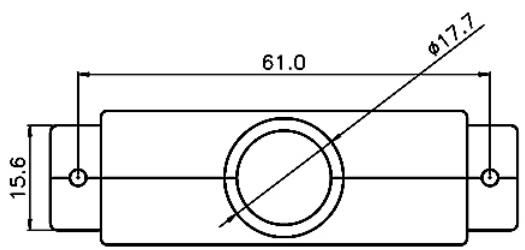

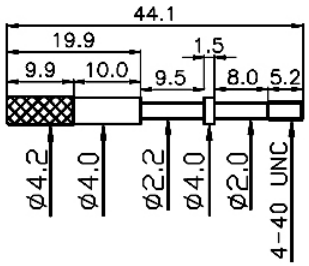

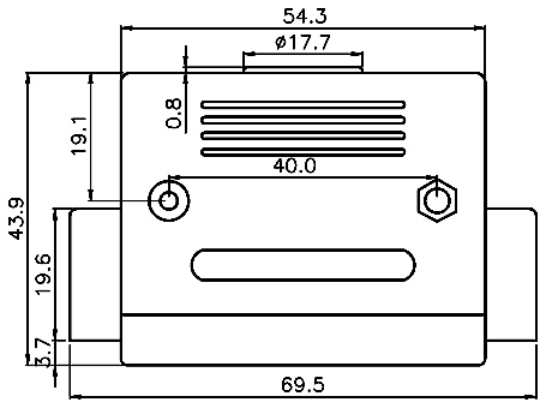

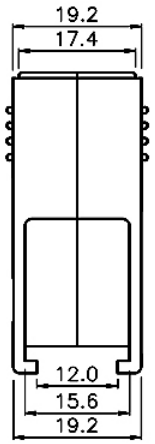

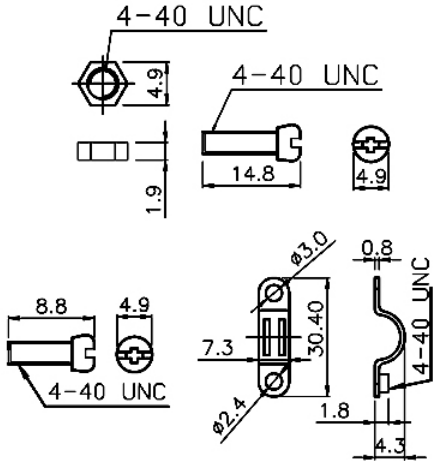

SPECIFICATIONS

Insulator:	ABS UL94HB
Screw:	Steel

Series	Type	Material	Hardware
DBSXX	R104	XX	XX
D-Sub Backshell	R104Style	PB=Black PG=Grey (std) PE=Beige PC=Metalized	SS=Standard Screw MS=Metal Thumb Screw

RoHS compliant

Rev.	Description	Date	Approved

Drawing	Name	Date
Approved	Howard	02/28/05
Checked	Lizzy	02/28/05
Drawn	Tina	02/28/05

0.0 ± 0.35 0.00 ± 0.20 Angles ± 3'

UNIT: mm

Central Components Manufacturing
440 Lincoln Blvd., Middlesex, New Jersey 08846
Phone 732 469-5720 888 288-5152 Fax 732 469-1919

Part No.: DBS50-R104-PX-MS

Description: D-Sub Plastic Hood, U-Type, 50P Long Ear, Long Screw