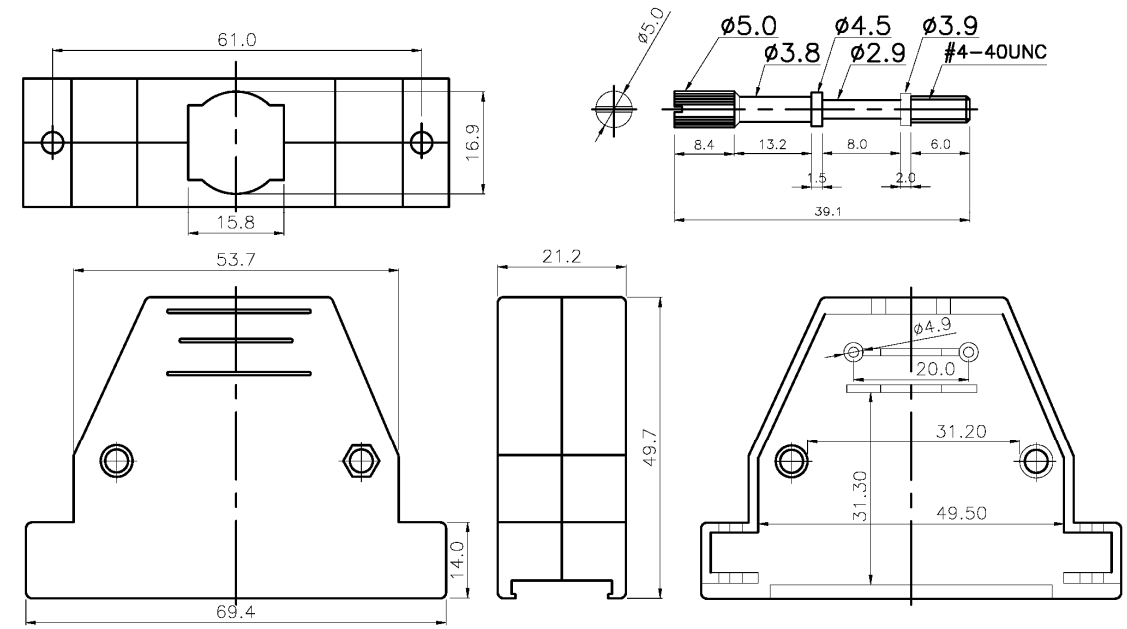

SPECIFICATIONS

Insulator Material:	ABS UL94HB
Screw Material:	Steel
Finish Material:	Chrome Plated

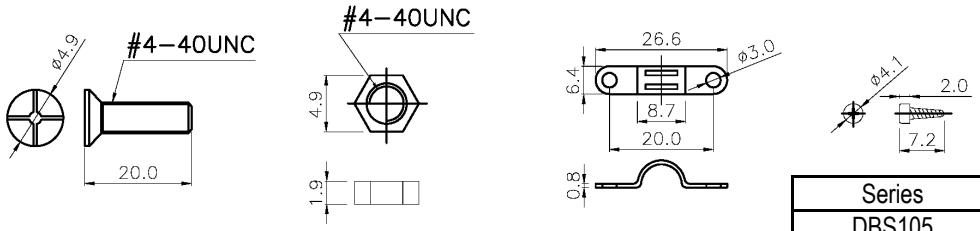

Series	Type	Hood	Hardware
DBS105	XXX	XX	XX
105 Pos. back shell	Type XXX	PG=Gray Plastic PB=Black Plastic PC=Metalized Plastic	SS=Standard Screw TS=Metal Thumb Screw PS=Plastic Thumb Screw

RoHS compliant

Rev.	Description	Date	Approved	Drawing	Name	Date
				Approved	Howard	01/22/09
				Checked	Lizzy	01/22/09
				Drawn	Tina	01/22/09
				0.0 ± 0.35	0.00 ± 0.20	Angles ± 3'
				UNIT: mm		

Central Components Manufacturing
440 Lincoln Blvd., Middlesex, New Jersey 08846
Phone 732 469-5720 888 288-5152 Fax 732 469-1919

Part No.: **DBS50-105-XX-TS**

Description: D-Sub Plastic Hood, Long Screw 50P Middle Ear Type