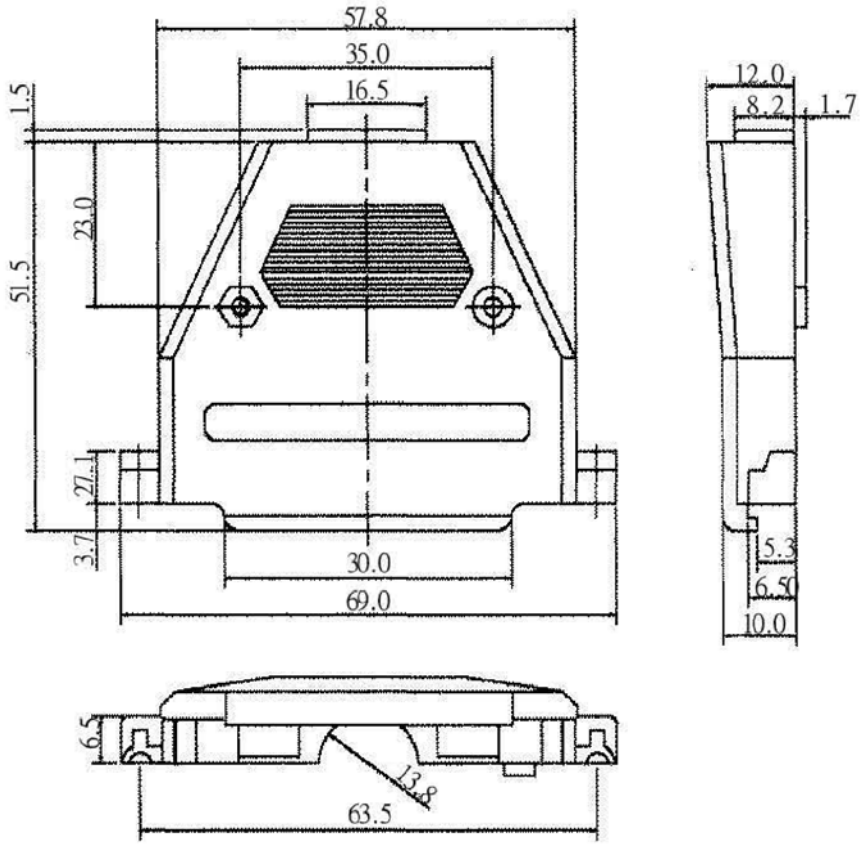

SPECIFICATIONS

Shell:	ABS (UL94-HB)
Shell Plating:	Nickel Plated
Accessories:	Steel, Nickel Plating

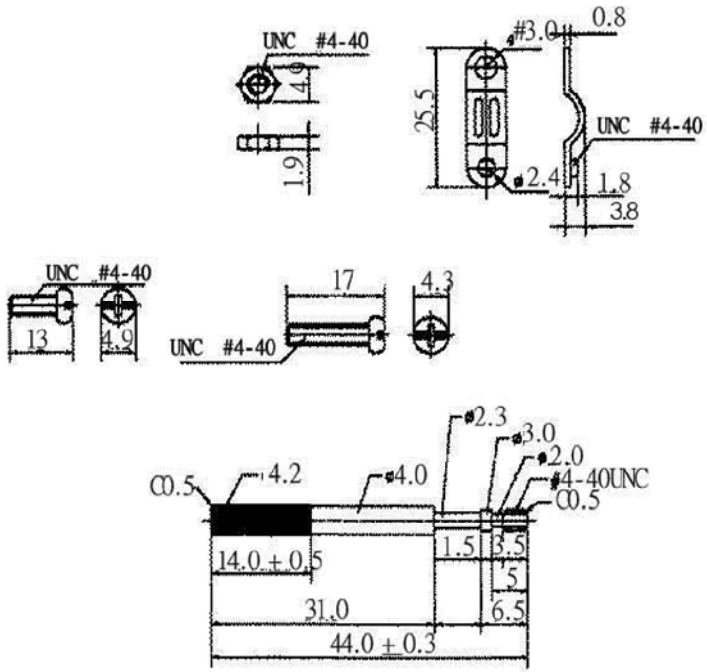

Series	Material	Hardware
DBS37	XX	XX
D-Sub Backshell	PG=Gray Plastic PB=Black Plastic PI=Ivory Plastic PN=Nickle Plated Plastic	SS=Standard Screw MS=Metal Thumb Screw

RoHS compliant

Rev.	Description	Date	Approved	Drawing	Name	Date
				Approved	Howard	02/28/05
				Checked	Lizzy	02/28/05
				Drawn	Tina	02/28/05
				0.0 ± 0.35	0.00 ± 0.20	Angles ± 3'
				UNIT: mm		

Central Components Manufacturing
440 Lincoln Blvd., Middlesex, New Jersey 08846
Phone 732 469-5720 888 288-5152 Fax 732 469-1919

Part No.: **DBS37-XX-MS**

Description: 37 Position Plastic D-Sub Backshell