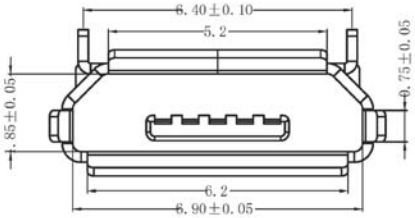

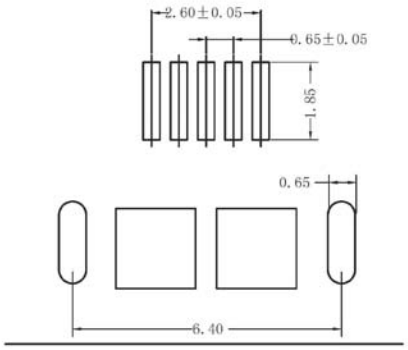

PCB LAYOUT

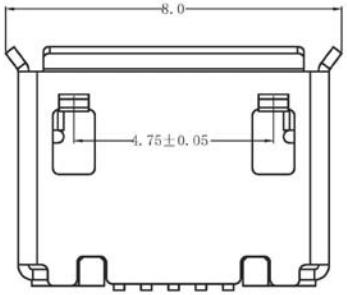

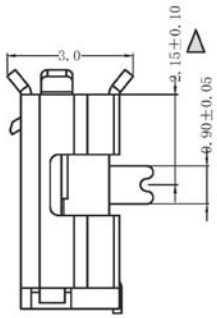

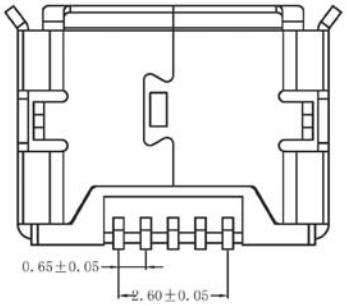

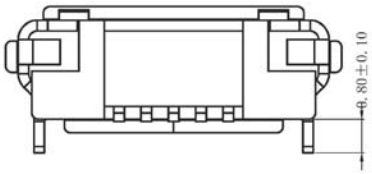

SPECIFICATIONS

Current:	1.0A
Voltage:	30V Max
Contact Resistance:	30 Milliohms Max.
Withstanding:	500V AC
Insulation Resistance:	100 Megohms Min
Mating Force:	35N Max
Unmating Force:	10N Min.
	8~20N after 10000 Cycles
Durability:	10000 Cycles
Housing:	LCP, UL94V-0 Black
Contact:	Copper Alloy, 0.15mm
Shell:	Copper Alloy, 0.30mm
Contact:	Gold over Nickel
Shell:	Tin over Nickel

RoHS compliant

Rev.	Description	Date	Approved	Drawing	Name	Date
				Approved	Howard	12/03/13
				Checked	Lizzy	12/03/13
				Drawn	Tina	12/03/13
				0.0 ± 0.35	0.00 ± 0.20	Angles ± 3'
				UNIT: mm		

Central Components Manufacturing
440 Lincoln Blvd., Middlesex, New Jersey 08846
Phone 732 469-5720 888 288-5152 Fax 732 469-1919

Part No.: CUSB-UB-SA-1F5RST-L-N-SG-BK

Description: Micro USB 5P B/F SMT