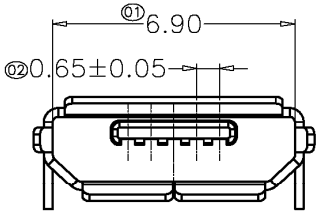

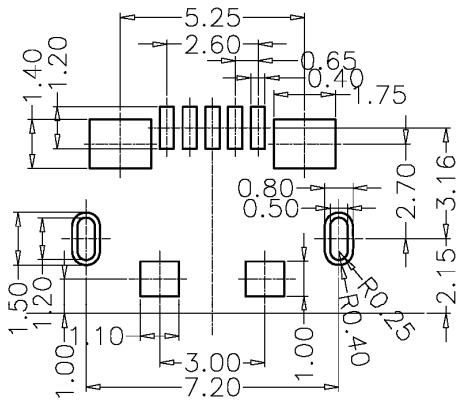

RECOMMENDED P.C.B.LAYOUT
TOLERANCE:±0.05

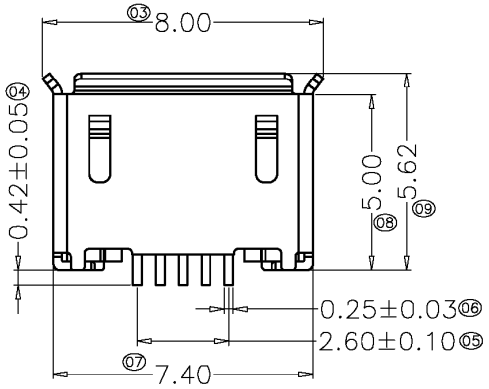

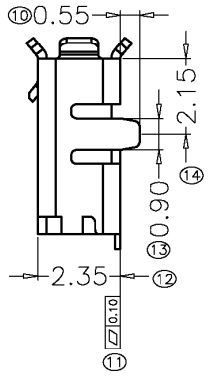

SPECIFICATIONS

Voltage Rating:	30VAC RMS
Current Rating:	1 AMP min.
Contact Material:	Phosphor Bronze, Gold Plating over Nickel T=0.15
Contact Resistance:	30 Miniohms Max.
Housing Material:	High Temp UL94V-0, Black
Insulation Resistance:	100 Megohms Min 100VDC
Shell Material:	SUS 304 T=0.25, Nickel Plating
Mating Force:	35N Max
Unmating Force:	8N Min
Operating Life:	10000
Recommended PCB Thickness:	1.20mm
Withstanding:	100VAC RMS 60MHZ 1min.
Operating Temp:	-30ºC to 80ºC

RoHS compliant

Rev.	Description	Date	Approved	Drawing	Name	Date
				Approved	Howard	05/13/09
				Checked	Lizzy	05/13/09
				Drawn	Tina	05/13/09
				0.0 ± 0.35	0.00 ± 0.20	Angles ± 3'
				UNIT: mm		

Central Components Manufacturing
440 Lincoln Blvd., Middlesex, New Jersey 08846
Phone 732 469-5720 888 288-5152 Fax 732 469-1919

Part No.: **CUSB-MCB-JRSA-05SS1N3BBA**

Description: Micro USB Type 5P SMT