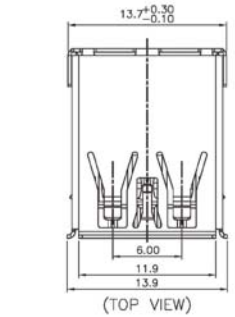

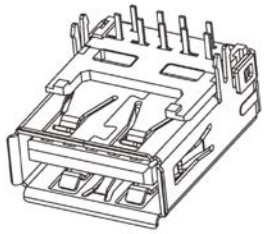

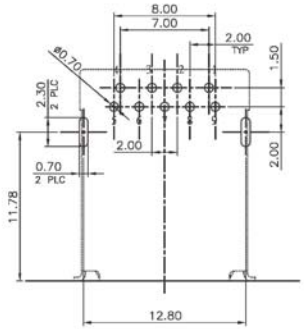

TOLERANCE: ±0.05, THICKNESS: 1.2mm
RECOMMENDED PCB LAYOUT
(TOP VIEW)

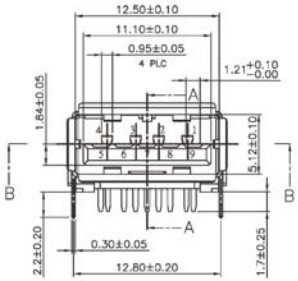

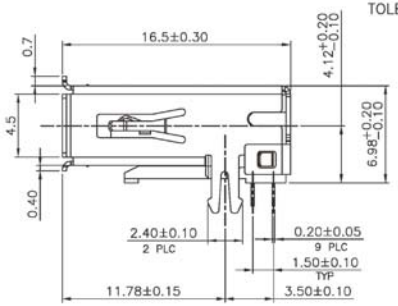

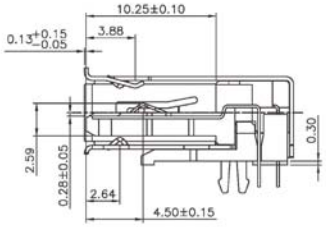

SECTION A–A

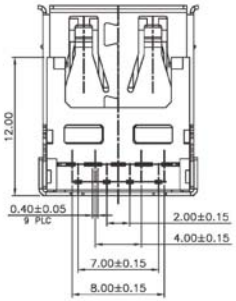

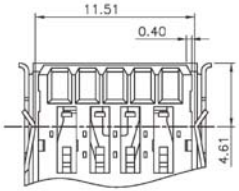

SECTION B–B

SPECIFICATIONS

Current Rating:	1.5A
Insulator Material:	High Temperature Plastic LCP UL94V-0, Black
Contact Material:	Copper Alloy
Shell Material:	Stainless Steel
Contact Plating:	Gold over Nickel and Tin all over Nickel on Solder Area
Shell Plating:	50u" Min Nickel
Contact Resistance:	30mΩ Max
Insulation Resistance:	100 Megohms Min
Mating Force:	35 N Max
Unmating Force:	10 N Min Initial: 8 N Min After Test
Durability:	5000 Cycles
Withstanding:	100V AC RMS
Operating Temp:	-40°C to +85°C

Series	Type	Ports/Gender/Cont/ Mount	Material	Shell Plating	Contact Plating
CUSB	A3R	1F9RT	A	N	SG30
USB Connector	Type A 3.0 reverse	Single Port Female, 9 Contacts, R/A Through Hole	LCP	Nickel	30µ" Selective Gold

RoHS compliant

Rev.	Description	Date	Approved

Drawing	Name	Date
Approved	Howard	08/12/11
Checked	Lizzy	08/12/11
Drawn	Tina	08/12/11
0.0 ± 0.35	0.00 ± 0.20	Angles ± 3'
	UNIT: mm	

Central Components Manufacturing
440 Lincoln Blvd., Middlesex, New Jersey 08846
Phone 732 469-5720 888 288-5152 Fax 732 469-1919

Part No.: CUSB-A3R-1F9RT-A-N-SG30

Description: USB type A 3.0 reverse female, right angle through hole