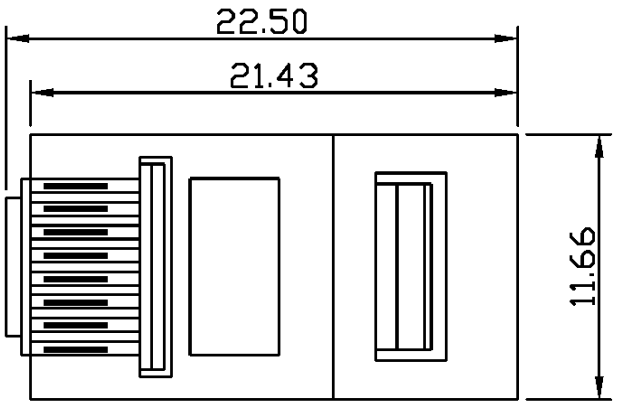

SPECIFICATIONS
Contact material: Copper alloy
Contact plating: Gold (15μ", 30μ", 50μ")
Housing material: PC, UL94V-2 or UL94V-0

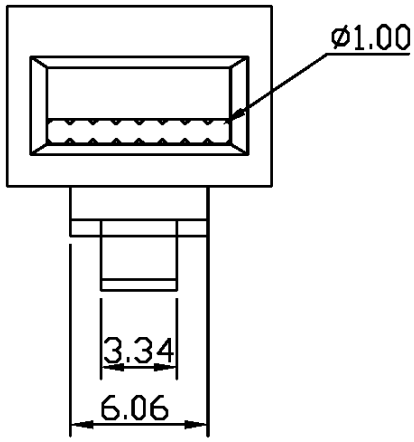

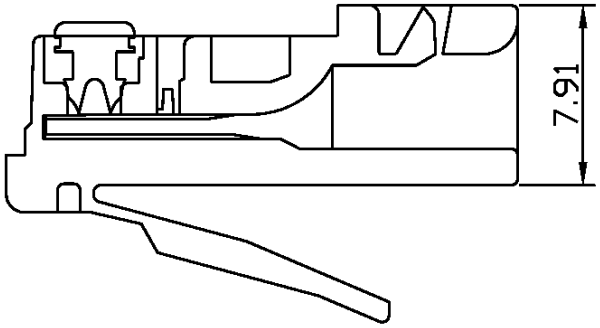

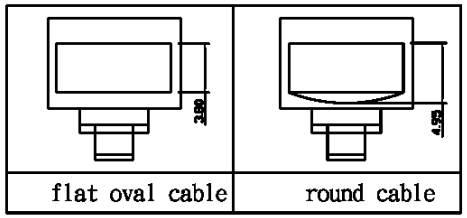

Contact blade (A or B)

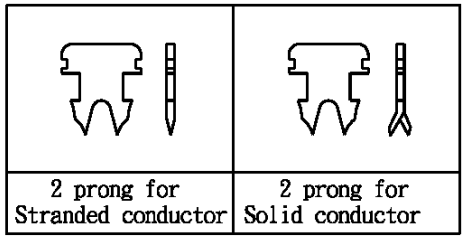

Others

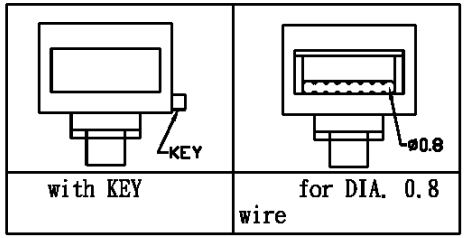

Series	Plug Size	Contacts	Plating	Options	
CTP	XX	X	PX	XX	
Modular plug	4, 6, 8, 10	2, 4, 6, 8, 10	P1=15μ" gold P2=30μ" gold P3=50μ" gold	[blank]=Oval (flat) RW=Round wire SD=.8 dia. conductor SW=Solid wire (stranded if omitted)	MS=Metal shield KY=Keyed OS=Offset latch

RoHS compliant

Rev.	Description	Date	Approved

Drawing	Name	Date
Approved	Howard	07/10/02
Checked	Lizzy	07/10/02
Drawn	Tina	07/10/02

0.0 ± 0.35 0.00 ± 0.20 Angles ± 3'

UNIT: mm

Central Components Manufacturing
440 Lincoln Blvd., Middlesex, New Jersey 08846
Phone 732 469-5720 888 288-5152 Fax 732 469-1919

Part No.: **CTP-08-8-P1**

Description: Modular plug, 8 positions