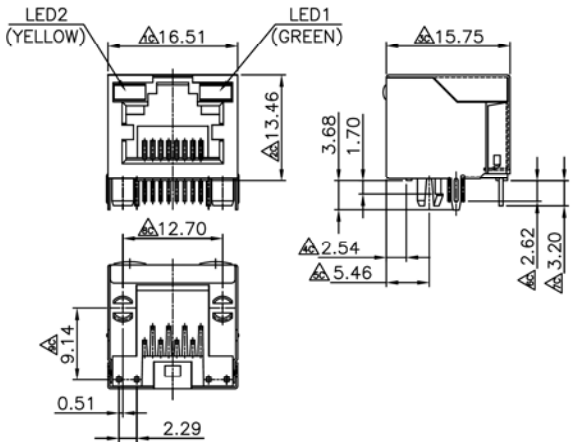

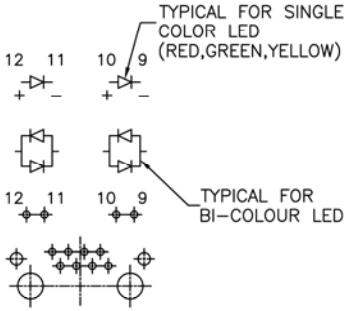

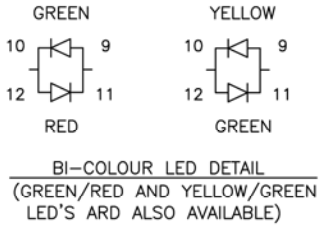

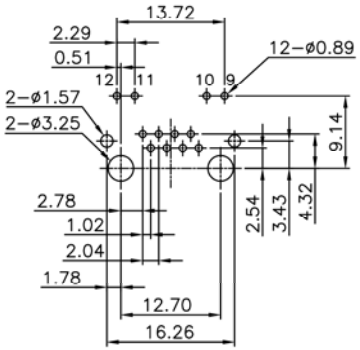

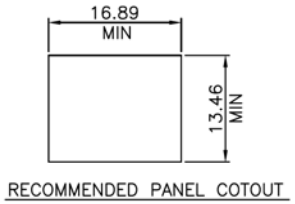

SPECIFICATIONS

Plastic Housing:	Engineering Thermpolastic UL94V-0
Contacts:	Phosphor Bronze Gold Plating over Nickel in Contact Tin Plating over Nickel in Solder Area
Shield:	Copper Alloy Plating Tin

LED Color Codes	
Code	LED
G	Green
Y	Yellow
D	Red/Green
W	Yellow/Green
K	Blank

Series	Positions	Contacts	Type	Color	Plating	Options	Panel Grounds
CTJ	X	X	3046LXX	XX	PX	XY	
Mod jack,	6, 8	04, 06, 08	Top Latch With LEDs XX=LED Colors (See chart)	BK=Black	P0=6µ" gold P1=15µ" gold P2=30µ" gold P3=50µ" gold	X:[blank]=None S=Full shield	Y:[blank]=None 1=Top (single) 2=Sides 3=Top & sides

RoHS compliant

Rev.	Description	Date	Approved

Drawing	Name	Date
Approved	Howard	7/24/91
Checked	Lizzy	7/24/91
Drawn	Tina	7/24/91

0.0 ± 0.35 0.00 ± 0.20 Angles ± 3'

UNIT: mm

Central Components Manufacturing
440 Lincoln Blvd., Middlesex, New Jersey 08846
Phone 732 469-5720 888 288-5152 Fax 732 469-1919

Part No.: CTJ-8-08-3046LXX-BK-PX-SY

Description: modular jack with LED, type 3046, shielded