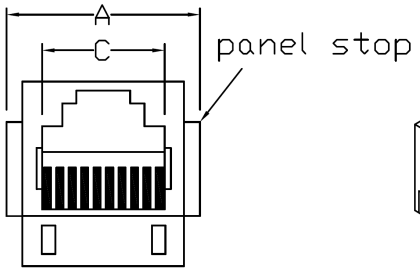

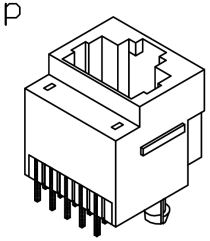

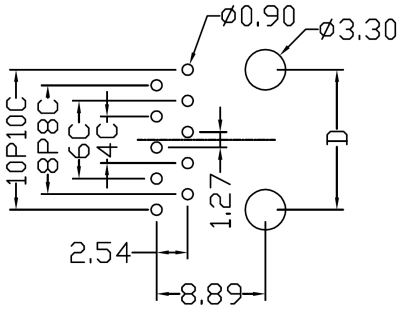

PCB LAYOUT / TOP VIEW

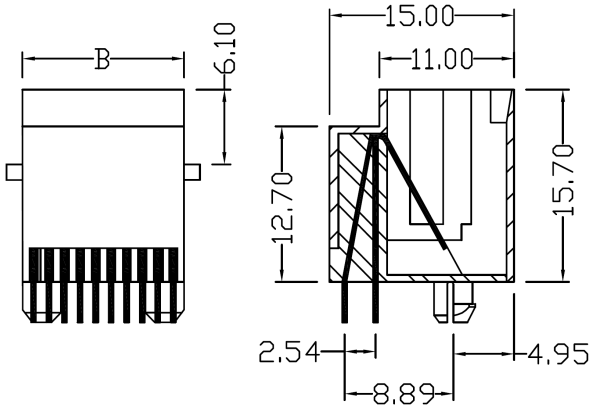

SPECIFICATIONS

Voltage Rating:	125V
Current Rating:	1.5A
Contact Resistance:	30 Milliohms Max.
Insulation Resistance:	500 Megaohms Min.
Housing Material:	PBT UL94V-0, Black
Contact Material:	Phosphor Bronze
Contact Plating:	Gold Plating over Nickel On Contact Area, Tin over Nickel on Solder Area
Withstanding:	1000V
Durability:	750 cycles min.
Temperature:	-40°C to +80°C

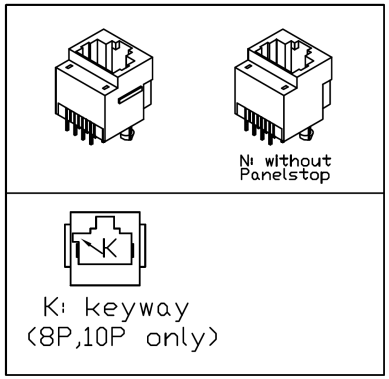

Series	Positions	Contacts	Type	Color	Plating	Options
CTJ	X	XX	953	XX	PX	XX
Modular jack single position	6,8,10	02-10	Vertical Through Hole	BK=Black	P0=6u” P1=15u” P2=30u” P3=50u”	Blank=None WF=No Flange KY=Keyed

RoHS compliant

Rev.	Description	Date	Approved

Drawing	Name	Date
Approved	Howard	12/07/09
Checked	Lizzy	12/07/09
Drawn	Tina	12/07/09

0.0 ± 0.35 0.00 ± 0.20 Angles ± 3’

UNIT: mm

Central Components Manufacturing
440 Lincoln Blvd., Middlesex, New Jersey 08846
Phone 732 469-5720 888 288-5152 Fax 732 469-1919

Part No.: **CTJ-8-08-953-BK-PX**

Description: Modular Jack 953 8P Top Entry