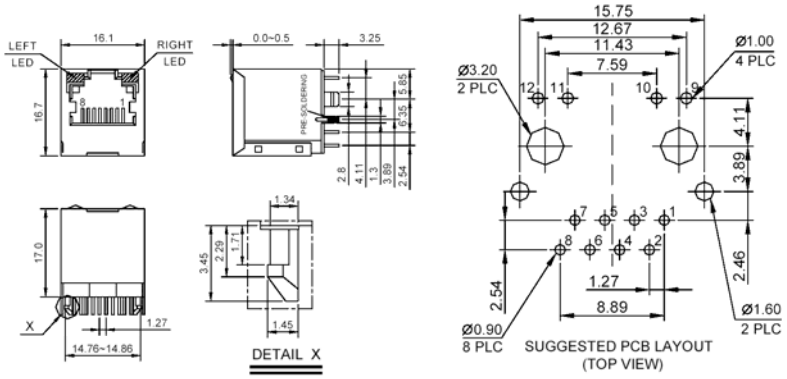

Unit: mm Unless otherwise specified, all tolerances are ±0.25

二、Schematics

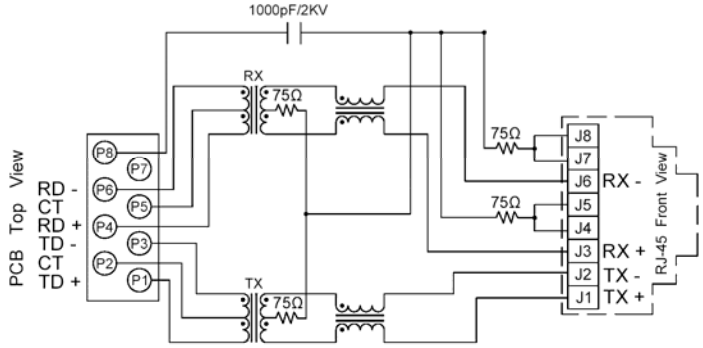

Standard LED	Wavelength	Forward*V(MAX)	TYP
Green	565nm	2.5v	2.2v
Yellow	585nm	2.5v	2.1v

With a forward current of 20mA

SPECIFICATIONS

Turn Ratio:	1CT:1CT
OCL:	350uH Min
LL:	0.3uH Max
Cw/w:	30pF Max
Insertion Loss:	-1.1dB (0.3-100MHz)
Return Loss:	-18dB(1-30MHz), -12dB(60-80MHz)
Crosstalk:	-35dB (1-100MHz)
CMR:	-35dB (1-100MHz)
DCR:	1.2Ω Max
Hi-Pot:	1500 Vrms/0.5mA/60Sec or 1650 Vrms/0.5mA/2 Sec
Operating Temperature:	-40ºC ~ +85ºC
Housing Material:	Nylon UL94V-0, Black
Insert Material:	Phosphor Bronze C5210 EH 0.35mm Thickness Insert=PBT GF UL94V-0 (1)Plating Nickel (2) Plating 100% Sn (3) Plating Gold (3u" ~ 50u")
Contact Pin Material:	Phosphor Bronze C5191 0.35mm Thickness (1) Plating Nickel (2) Plating 100% SN
Shielding Material:	Brass C2680 Plating Nickel
Operating Life:	750 Cycles Min.
Storage Temp:	-40C to +85C
Operating Temp:	-40C to +85C

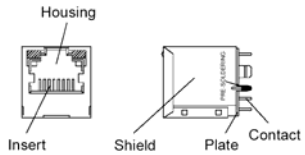

RoHS compliant

Rev.	Description	Date	Approved	Drawing	Name	Date
				Approved	Howard	05/11/10
				Checked	Lizzy	05/11/10
				Drawn	Tina	05/11/10
				0.0 ± 0.35	0.00 ± 0.20	Angles ± 3'
				UNIT: mm		

Central Components Manufacturing
440 Lincoln Blvd., Middlesex, New Jersey 08846
Phone 732 469-5720 888 288-5152 Fax 732 469-1919

Part No.: **CTJ-8-08-51F1203LGY-BK-PX-FS**

Description: 180 Rj45 10/100 Base-T Jack w/ Magnetic Module