PCB LAYOUT/TOP VIEW

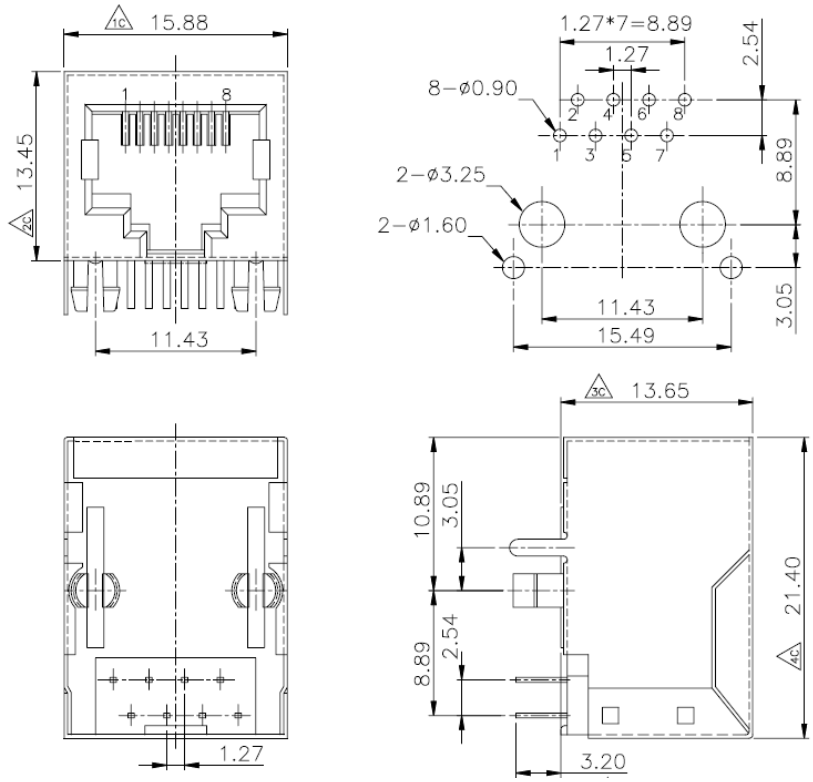

SPECIFICATIONS

Plastic Housing:	Thermoplastic UL94V-0
Contacts:	.35mm Phosphor Bronze
Plating:	Gold over Nickel in contact Tin over Nickel in solder
Shield:	Brass w/ Nickel Plating

LEDs Available

RoHS compliant

Series	Position	Contacts	Style	Color	Plating	Options
CTJ	X	XX	3012X	BK	PX	FSX
Modular phone jack	8,10	2,4,6,8,10	Top entry X: Blank = Flat Pins R=Round Pins	BK=Black	P0=6u" gold P1=15u" gold P2=30u" gold P3=50u" gold	FSX=Full shield X=Panel Grounds None if Blank 2=Top 4=Sides 6=Top & Sides

Rev.	Description	Date	Approved

Drawing	Name	Date
Approved	Howard	05/29/09
Checked	Lizzy	05/29/09
Drawn	Tina	05/29/09

0.0 ± 0.35 0.00 ± 0.20 Angles ± 3°

UNIT: mm

Central Components Manufacturing
440 Lincoln Blvd., Middlesex, New Jersey 08846
Phone 732 469-5720 888 288-5152 Fax 732 469-1919

Part No.: CTJ-8-08-3012-BK-PX-FS

Description: Shielded Modular Telephone Jack, Side Entry PCB Jack 8P8C