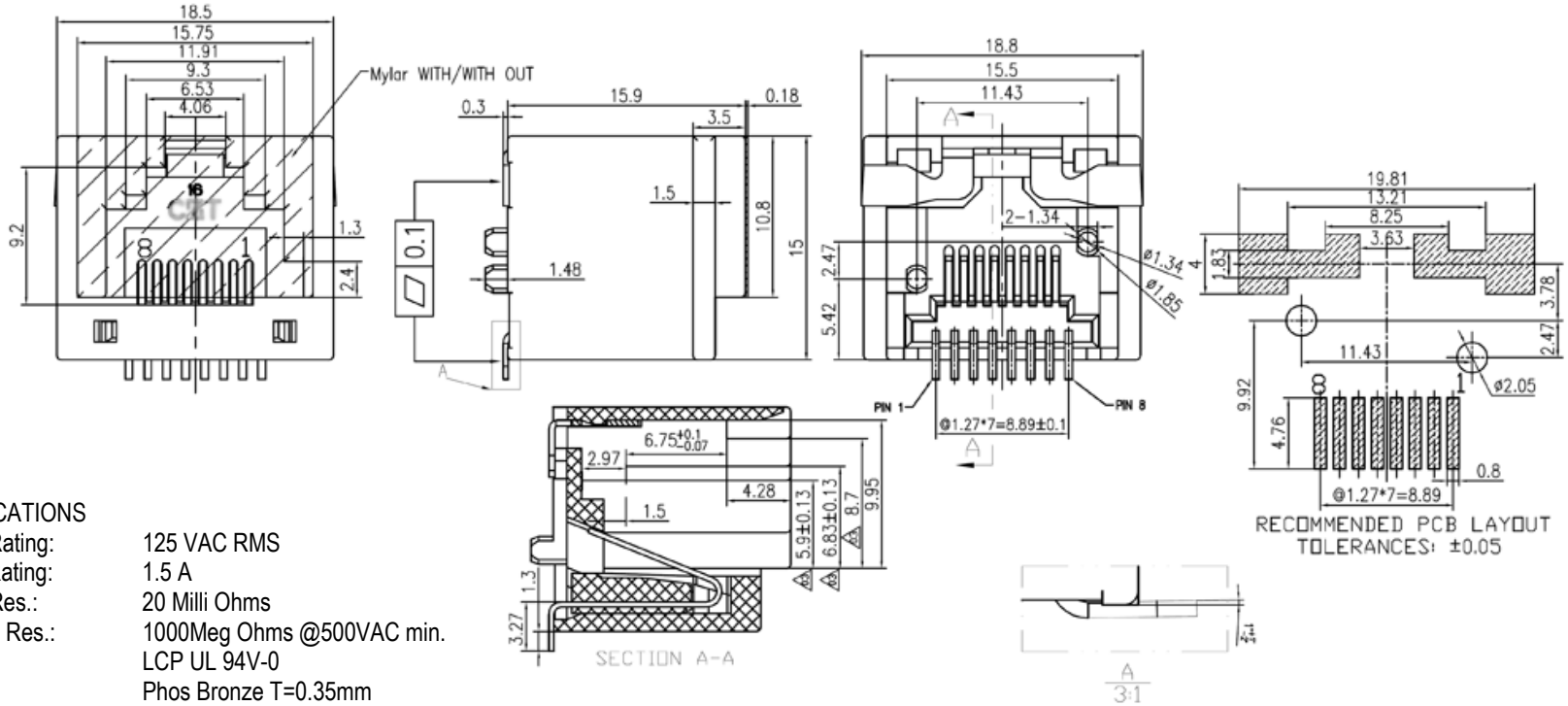

SPECIFICATIONS

Voltage Rating:	125 VAC RMS
Current Rating:	1.5 A
Contact Res.:	20 Milli Ohms
Insulation Res.:	1000Meg Ohms @500VAC min.
Housing:	LCP UL 94V-0
Contacts:	Phos Bronze T=0.35mm
Mating/Unmating :	30N
Retention:	NC
Durability:	750 cycles Min.
Operating Temp.:	-40C to +85C

Series	Positions	Contacts	Body	Color	Plating
CTJ	X	XX	1306	BK	PX
Modular phone jack	6=6 positions 8=8 positions	06=6 contacts 08=8 contacts	Top entry, surface mount	BK=Black	P0=6μ" gold P1=15μ" gold P2=30μ" gold P3=50μ" gold

RoHS compliant

Rev.	Description	Date	Approved	Drawing	Name	Date
				Approved	Howard	11/07/14
				Checked	Lizzy	11/07/14
				Drawn	Tina	11/07/14
				0.0 ± 0.35	0.00 ± 0.20	Angles ± 3'
				UNIT: mm		

Central Components Manufacturing
440 Lincoln Blvd., Middlesex, New Jersey 08846
Phone 732 469-5720 888 288-5152 Fax 732 469-1919

Part No.: CTJ-8-08-1306-BK-PX

Description: Modular phone jack, top entry surface mount, hi temp material