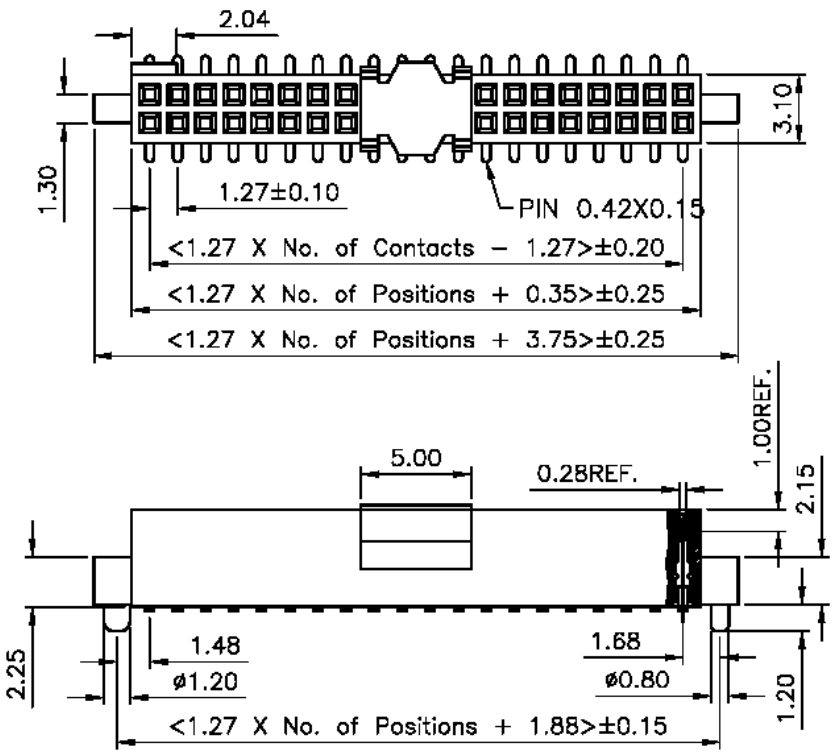

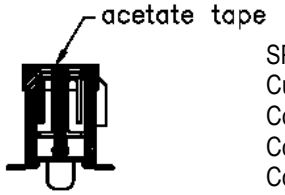

SPECIFICATIONS

Current rating:	1 amp
Contact material:	Phosphor bronze
Contact plating:	Tin or gold
Contact resistance:	20 milliohms max.
Insulator material:	Polyester, UL94V-0 For 4-25 pins: PA6T For 26-50 pins: LCP
Insulation resistance:	1,000 megohms min.
Withstanding:	300VAC/VDC for 1 min.
Temperature range:	-40°C to +105°C

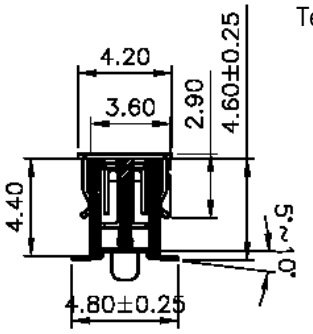

Recommended P.C.Board Layout
(Tolerance:±0.05)

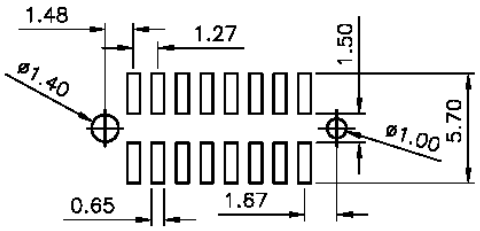

Series	No. of Rows	Type	Positions	Plating	Options
CRS	XX	SEC	XX	XX	XX
.05 x .05 receptacle strip	01=Single row 02=Dual row	SEC type	08-100	T=Tin GD15=15µ" gold SG15=15µ" selective gold	PP=Positioning pin TR=Tape and reel PPL=Pick and place pad

RoHS compliant

Rev.	Description	Date	Approved	Drawing	Name	Date
				Approved	Howard	08/10/99
				Checked	Lizzy	08/10/99
				Drawn	Tina	08/10/99
				0.0 ± 0.35	0.00 ± 0.20	Angles ± 3'
				UNIT: mm		

Central Components Manufacturing
440 Lincoln Blvd., Middlesex, New Jersey 08846
Phone 732 469-5720 888 288-5152 Fax 732 469-1919

Part No.: **CRS-02-SEC-30-SG15-PP-TR-PPL**

Description: Female header, 1.27mm pitch, dual row, SMT type, with post