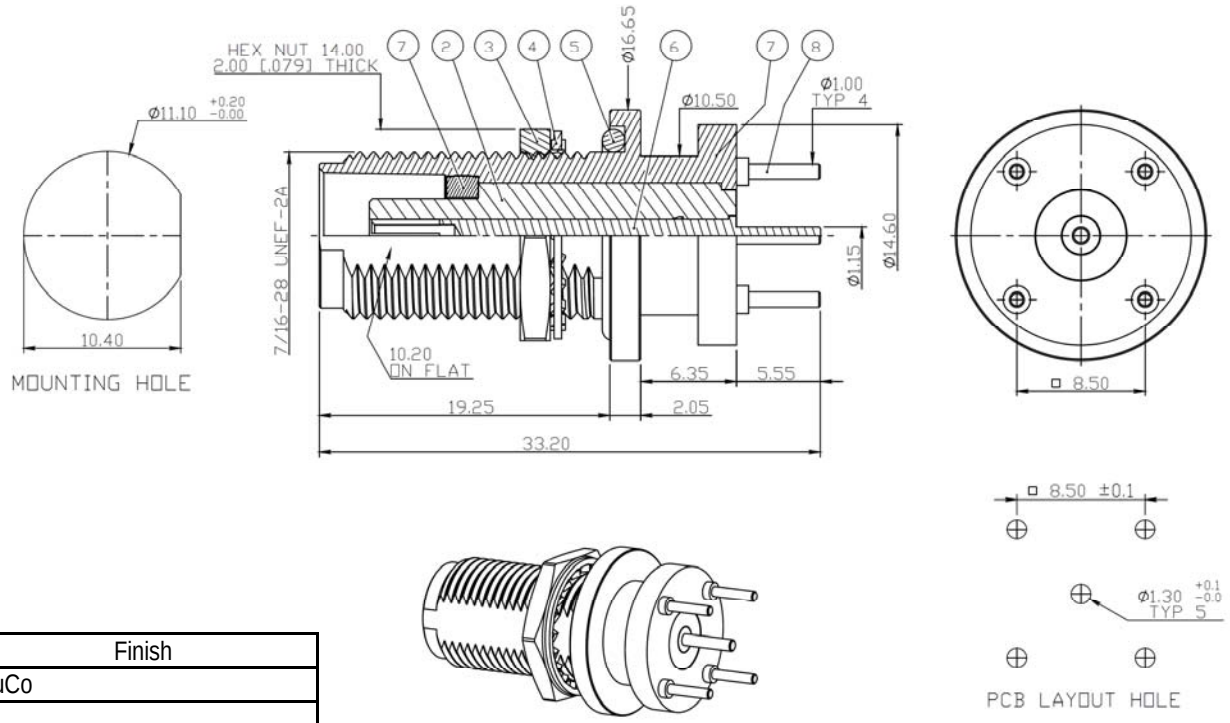

Item	Name	Material	Finish
7	Body	Brass	SuCo
2	Insulator	Teflon	
8	Pin	Brass	Tin
4	Washer	Brass	Suco
6	Center Pin	P.H. Bronze	Gold
4	Tooth Washer	Brass	Nickel
3	Nut	Brass	Nickel
5	O-Ring	Silicone	Red

RoHS compliant

Rev.	Description	Date	Approved	Drawing	Name	Date
				Approved	Howard	03/10/14
				Checked	Lizzy	03/10/14
				Drawn	Tina	03/10/14
				0.0 ± 0.35	0.00 ± 0.20	Angles ± 3'
				UNIT: mm		

Central Components Manufacturing
440 Lincoln Blvd., Middlesex, New Jersey 08846
Phone 732 469-5720 888 288-5152 Fax 732 469-1919

Part No.: CRF-TNC-2042TC-TGBG-A

Description: TNC Jack B/H PCB Mount Receptacle