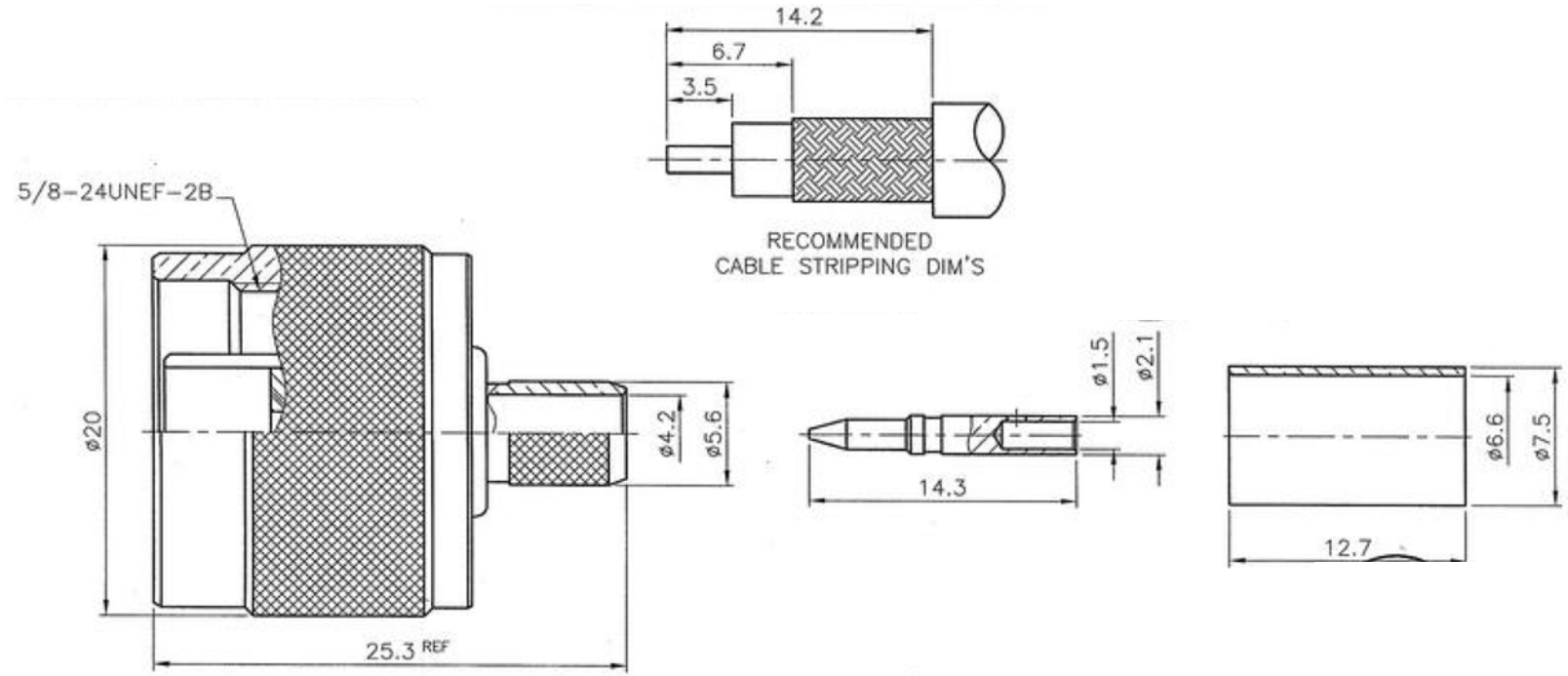

Crimped Ferrule: Hex Crimp Size .255”

Crimped Contact Pin: Hex Crimp Size .068”

Item	Name	Material	Finish
1	Body	Brass	Nickel over Copper
2	Braid Holder	Brass	Nickel over Copper
3	Insulator	Teflon	White
4	Gasket	Silicone	Orange
5	C Ring	Brass	Nickel over Copper
6	Shell	Brass	Nickel over Copper
7	Contact Pin	Brass	Gold over Nickel over Copper
8	Ferrule	Brass	Nickel over Copper

RoHS compliant

Rev.	Description	Date	Approved	Drawing	Name	Date
				Approved	Howard	11/26/08
				Checked	Lizzy	11/26/08
				Drawn	Tina	11/26/08
				0.0 ± 0.35	0.00 ± 0.20	Angles ± 3’
				UNIT: mm		

Central Components Manufacturing
440 Lincoln Blvd., Middlesex, New Jersey 08846
Phone 732 469-5720 888 288-5152 Fax 732 469-1919

Part No.: **CRF-N-7311NS-515BF001B**

Description: N Crimp Plug (for 8x, LMR-240,B7808A)