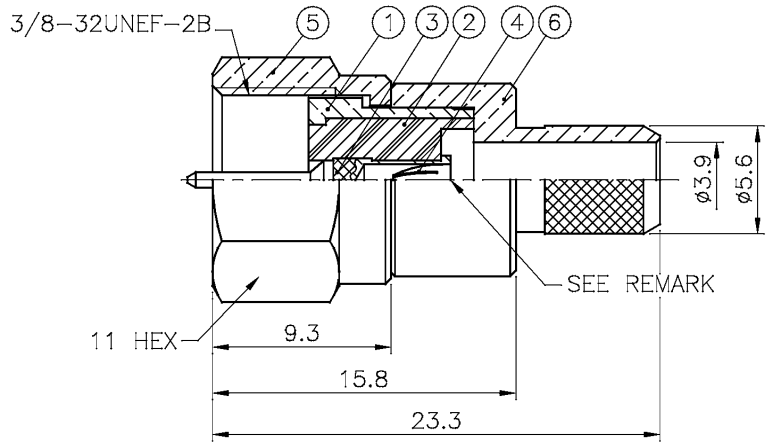

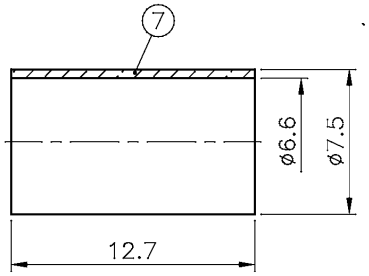

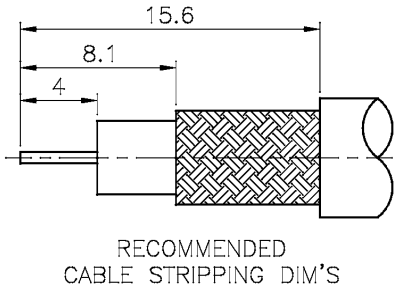

Item	Name	Material	Finish
1	Body	Brass	Nickel 70µ" over copper
2	Insulator	Teflon	White
3	Contact pin	Brass	Nickel 70µ" over copper
4	Contact pin	Beryllium copper	Gold 3µ" Nickel 70µ" over copper
5	Shell	Brass	Nickel 70µ" over copper
6	Braid holder	Brass	Nickel 70µ" over copper
7	Ferrule	Brass	Nickel 70µ" over copper

RoHS compliant

Rev.	Description	Date	Approved	Drawing	Name	Date
				Approved	Howard	04/07/06
				Checked	Lizzy	04/07/06
				Drawn	Tina	04/07/06
				0.0 ± 0.35	0.00 ± 0.20	Angles ± 3'
				UNIT: mm		

Central Components Manufacturing
440 Lincoln Blvd., Middlesex, New Jersey 08846
Phone 732 469-5720 888 288-5152 Fax 732 469-1919

Part No.: **CRF-F-7201R-05BNTG003**

Description: F crimp plug for RG-59/U