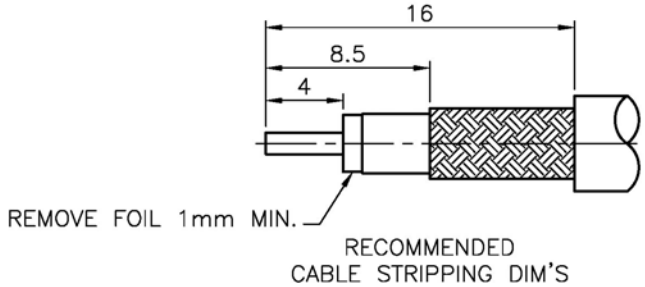

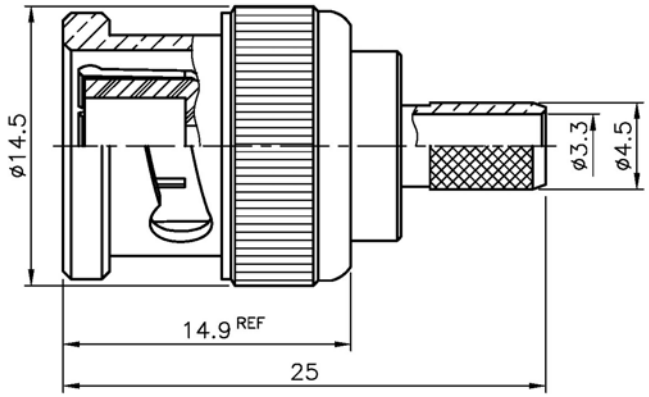

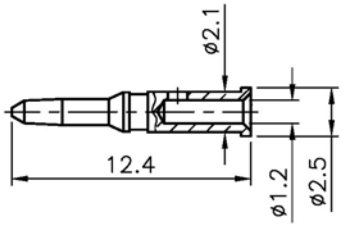

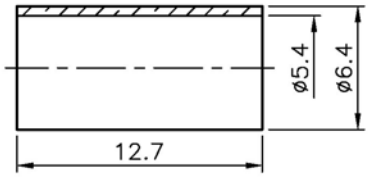

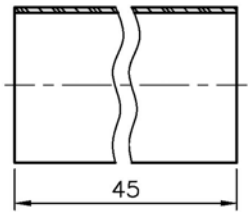

1. Crimped Ferrule:
   Hex Crimp Size .213" (5.41mm)

2. Crimped Contact Pin:
   SQ Crimp Size .068" (1.72mm)

Item	Name	Material	Finish
1	Body	Brass	Nickel over Copper
2	Insulator	Gold over Nickel over Copper	White
3	Washer	SS41	Nickel over Copper
4	Spring	SK5	Nickel over Copper
5	C Ring	SS41	Nickel over Copper
6	Gasket	Silicone	Red
7	Shell	Brass	Nickel over Copper
8	Contact Pin	Brass	Gold over Nickel over Copper
9	Ferrule	Brass	Nickel over Copper
10	Heat Shrink Tube		Black

RoHS compliant

Rev.	Description	Date	Approved	Drawing	Name	Date
				Approved	Howard	10/28/08
				Checked	Lizzy	10/28/08
				Drawn	Tina	10/28/08
				0.0 ± 0.35	0.00 ± 0.20	Angles ± 3'
				UNIT: mm		

Central Components Manufacturing
440 Lincoln Blvd., Middlesex, New Jersey 08846
Phone 732 469-5720 888 288-5152 Fax 732 469-1919

Part No.: **CRF-BNC-7011NS-503BF001B**

Description: BNC Crimp Plug