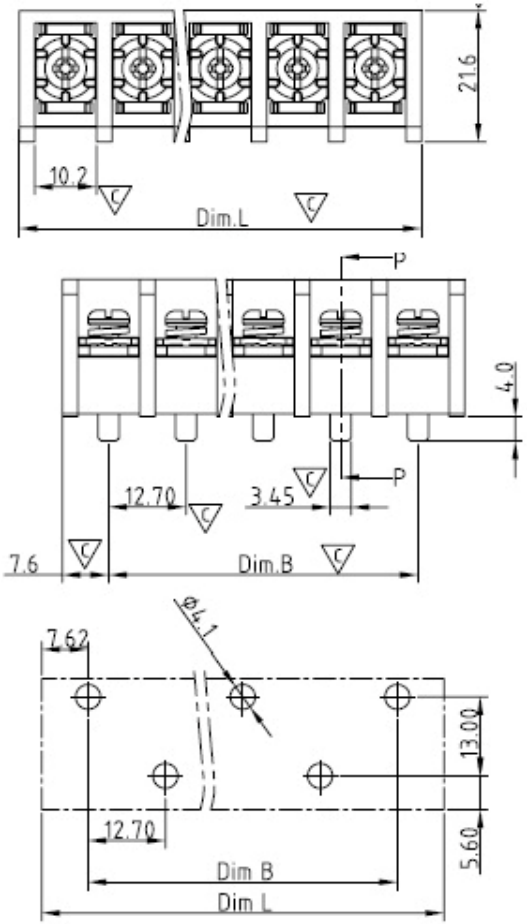

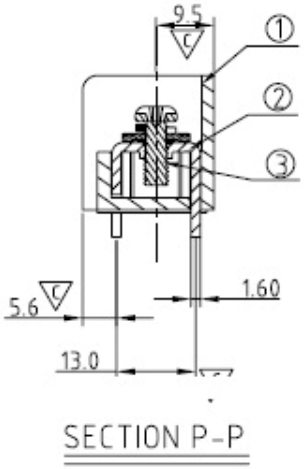

SPECIFICATIONS

Voltage Rating:	600V
Current Rating:	45A
Withstanding:	AC 2500 V/Min
Insulation Resistance:	1000MΩ min at DC 500V
Screw Torque Value:	16lb-in
Wire Range:	18-8 AWG
Body Material:	Thermoplastic, UL94V-0 Black
Terminal Material:	Brass, 1.6t, Tin Plated
Terminal Screws w/ Washer:	Steel, Ni Plated, M4.0
Operating Temp:	-40C +115C

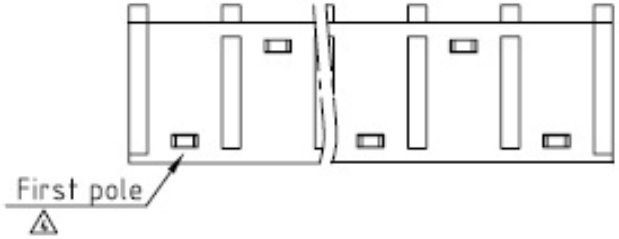

Dimensions			
Pole	2P~8P	9P~14P	15P~20P
Dim B	±0.20	±0.30	±0.40
Dim L	±0.30	±0.40	±0.60

RoHS compliant

Rev.	Description	Date	Approved	Drawing	Name	Date
				Approved	Howard	05/12/07
				Checked	Lizzy	05/12/07
				Drawn	Tina	05/12/07
				0.0 ± 0.35	0.00 ± 0.20	Angles ± 3°
				UNIT: mm		

Central Components Manufacturing
440 Lincoln Blvd., Middlesex, New Jersey 08846
Phone 732 469-5720 888 288-5152 Fax 732 469-1919

Part No.: CMTB-YK881-1270-06-BK

Description: Terminal Block