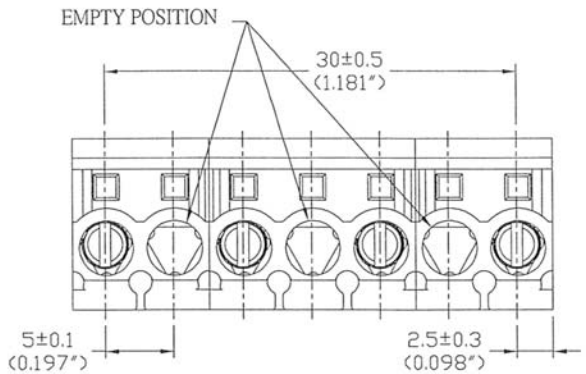

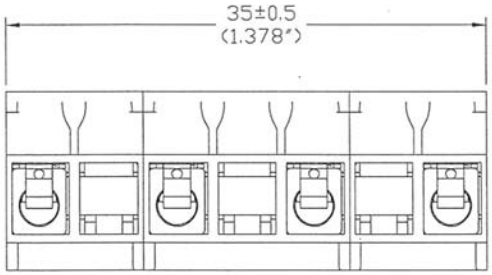

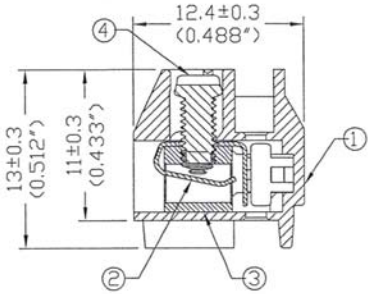

SPECIFICATIONS

Current Rating:	10Amp AC300V
Insulation Resistance:	>2000MΩ DC500V
Wire Strip Length:	6mm
Wire Range:	14~26 AWG
Screw Torque:	3.0 lb-inch
Withstanding:	AC 2000V min
Operating Temp:	-40C to +105C

Item	Name	Material	Finish
1	Insulating Body	Polyamide 66(UL94V-0)	Gray
2	Wire Protector	Phosphor Bronze	Tin Plated
3	Cage Clamp	Brass	Ni Plated
4	Screw	Steel	Zinc Plated

Series	Type	Pitch	Positions	Color
CMTB	MD212M	XXX	XX	GY
Terminal Block	Modular Plug For PCB	500=5.0mm 1000=10.0mm	02-12	GY=Gray

RoHS compliant

Rev.	Description	Date	Approved

Drawing	Name	Date
Approved	Howard	09/08/10
Checked	Lizzy	09/08/10
Drawn	Tina	09/08/10

0.0 ± 0.35 0.00 ± 0.20 Angles ± 3'

UNIT: mm

Central Components Manufacturing
440 Lincoln Blvd., Middlesex, New Jersey 08846
Phone 732 469-5720 888 288-5152 Fax 732 469-1919

Part No.: CMTB-MD212M-1000-XX-GY

Description: PCB Modular Plug