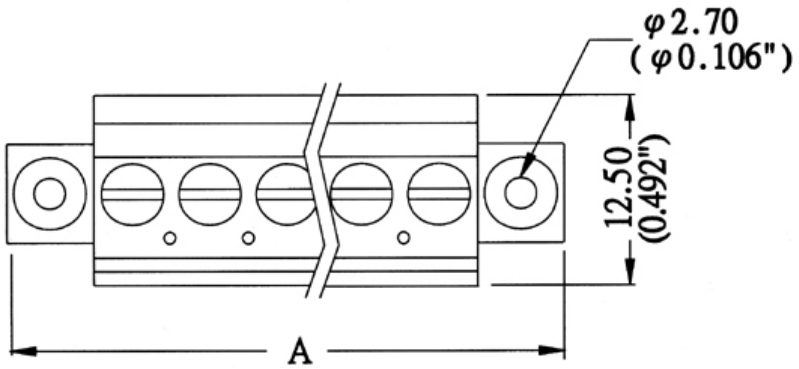

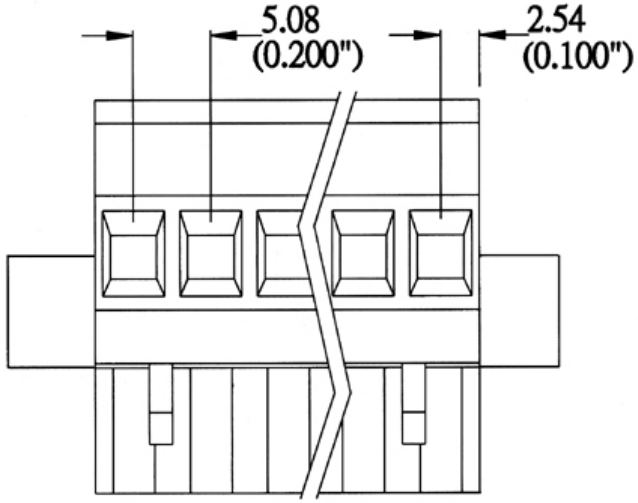

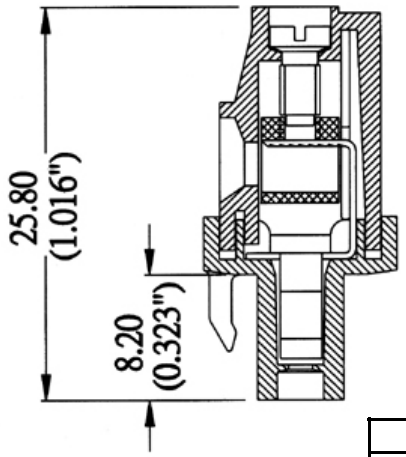

SPECIFICATIONS

Current rating:	16 amps
Contact material:	Phosphor bronze
Contact plating:	0.4T tin
Insulation material:	Polyamide66, UL94V-0
Insulation resistance:	5000 megohms min.
Withstanding:	2,000VAC for 1 min.
Screw material:	M2.6 steel
Screw plating:	Zinc
Wire strip length:	10mm
Wire range:	14-24AWG
Screw torque:	4.5 lb-inch
Operating temperature:	-50°C to +105°C

Pitch: 5.08mm (0.200")					
Poles	A(mm)	B(in)	Poles	A(mm)	B(in)
2	20.32	0.800	13	76.20	3.000
3	25.40	1.000	14	81.28	3.200
4	30.48	1.200	15	86.36	3.400
5	35.56	1.400	16	91.44	3.600
6	40.64	1.600	17	96.52	3.800
7	45.72	1.800	18	101.60	4.000
8	50.80	2.000	19	106.68	4.200
9	55.88	2.200	20	111.76	4.400
10	60.96	2.400	21	116.84	4.600
11	66.04	2.600	22	121.92	4.800
12	71.12	2.800			

Series	Type	Pitch	Positions	Color
CMTB	MC201	XXX	XX	GN
Terminal block	Plug, with flanges	500=5.00mm pitch 508=5.08mm pitch	02-22	GN=Green

RoHS compliant

Rev.	Description	Date	Approved

Drawing	Name	Date
Approved	Howard	08/10/99
Checked	Lizzy	08/10/99
Drawn	Tina	08/10/99
0.0 ± 0.35	0.00 ± 0.20	Angles ± 3'
	UNIT: mm	

Central Components Manufacturing
440 Lincoln Blvd., Middlesex, New Jersey 08846
Phone 732 469-5720 888 288-5152 Fax 732 469-1919

Part No.: **CMTB-MC201-XXX-XX-GN**

Description: Terminal block, plug, top screw, side wire entry, with flanges