Dimensions		
Pos.	A	B
2	23.8	11
3	34.8	22
4	45.8	33
5	56.8	44
6	67.8	55
7	78.8	66
8	89.8	77
9	100.8	88
10	111.8	99
11	122.8	110
12	133.8	121
13	144.8	132
14	155.8	143
15	166.8	154
16	177.8	165
17	188.8	176
18	199.8	187
19	210.8	198
20	221.8	209
21	232.8	220
22	243.8	231
23	254.8	242
24	265.8	253
25	276.8	264
26	287.8	275
27	298.8	286
28	309.8	297
29	320.8	308
30	331.8	319
31	342.8	330
32	353.8	341

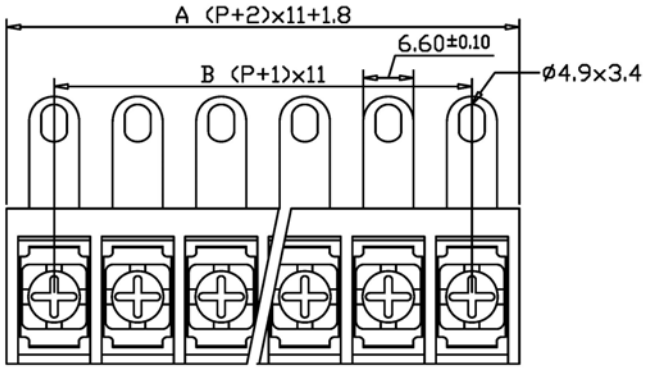

SPECIFICATIONS

Current rating:	30 amps
Voltage rating:	600VAC
Terminals:	Brass, tin plated
Insulator material:	Thermoplastic, UL94V-0
Insulator resistance:	500 megohms/500VDC min.
Cover material:	PC
Screws:	Steel, nickel plated
Withstanding:	2,000VA
Wire range:	12-22AWG, stranded

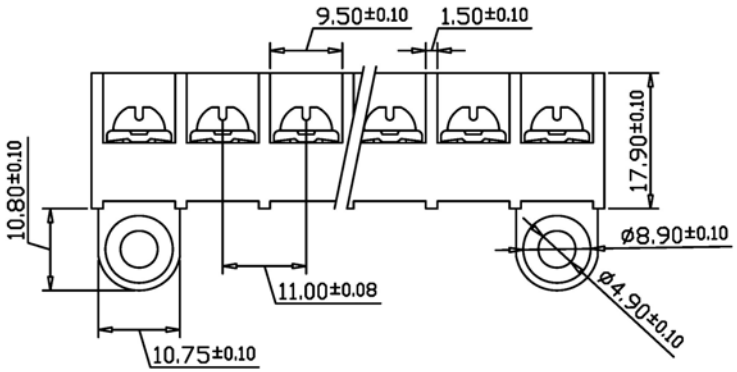

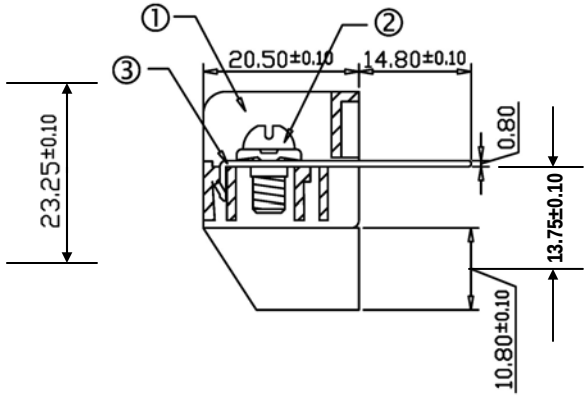

Series	Type	Pitch	Positions	Color
CMTB	HD333B	1100	XX	XX
Terminal block	Closed Barrier	1100mm Pitch	2-30	GN=Green BK=Black

RoHS compliant

Rev.	Description	Date	Approved
A	PNT	05/15/12	

Drawing	Name	Date
Approved	Howard	08/10/99
Checked	Lizzy	08/10/99
Drawn	Tina	08/10/99

0.0 ± 0.35 0.00 ± 0.20 Angles ± 3'

UNIT: mm

Central Components Manufacturing
440 Lincoln Blvd., Middlesex, New Jersey 08846
Phone 732 469-5720 888 288-5152 Fax 732 469-1919

Part No.: **CMTB-HD333B-1100-XX-XX**

Description: Closed barrier type terminal block with mounting bushings