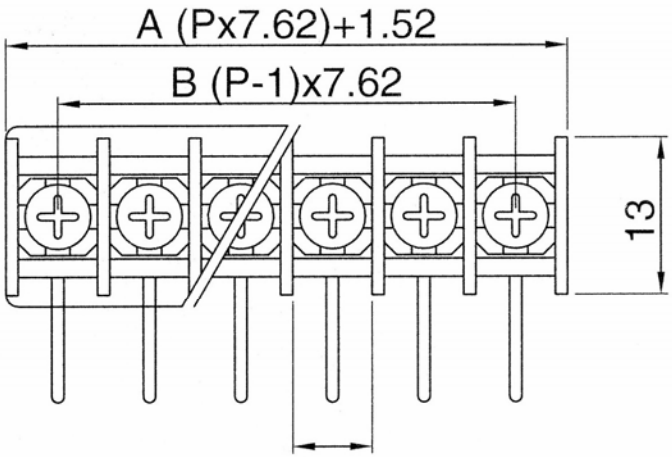

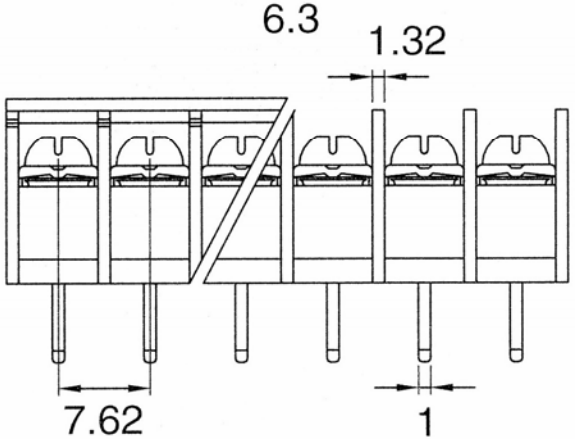

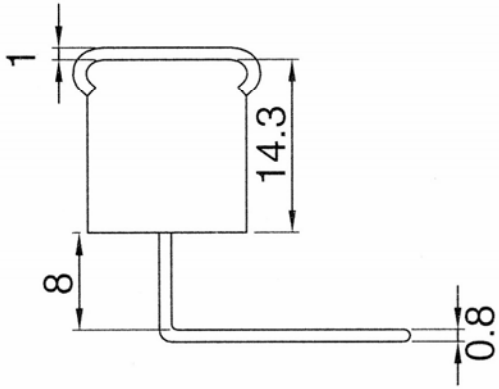

SPECIFICATIONS

Current rating:	10 amps
Operating voltage:	300VAC
Terminal material:	Brass
Terminal plating:	Tin
Screw material:	Steel
Screw plating:	Nickel
Barrier material:	Thermoplastic, UL94V-0, black
Insulator resistance:	500 megohms min.
Withstanding:	2,000VAC
Wire Range:	AWG 18 to AWG 22, stranded

Series	Type		Pitch	Poles	Color
CMTB	FTB708XX		762	XX	BK
Terminal block	[blank]=No options F=Flange	C=Cover FC=Flange & cover	762=7.62mm pitch	02-32 poles	BK=Black

RoHS compliant

Rev.	Description	Date	Approved	Drawing	Name	Date
				Approved	Howard	08/10/99
				Checked	Lizzy	08/10/99
				Drawn	Tina	08/10/99
				0.0 ± 0.35	0.00 ± 0.20	Angles ± 3’
				UNIT: mm		

Central Components Manufacturing
440 Lincoln Blvd., Middlesex, New Jersey 08846
Phone 732 469-5720 888 288-5152 Fax 732 469-1919

Part No.: **CMTB-FTB708XX-762-XX-BK**

Description: 7.62mm pitch barrier strip, style 8