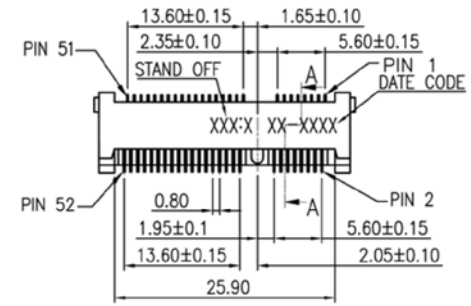

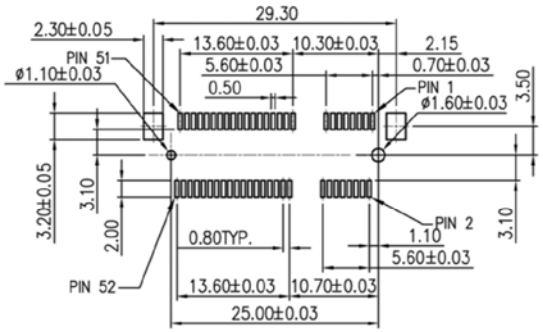

Recommended P.C.Board Layout

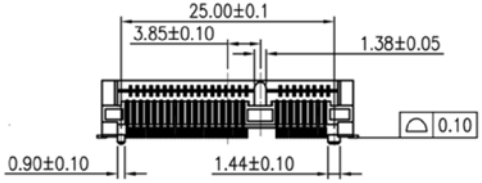

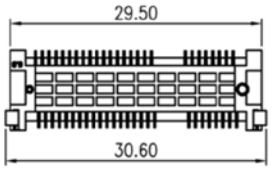

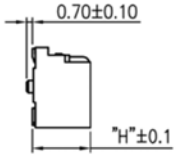

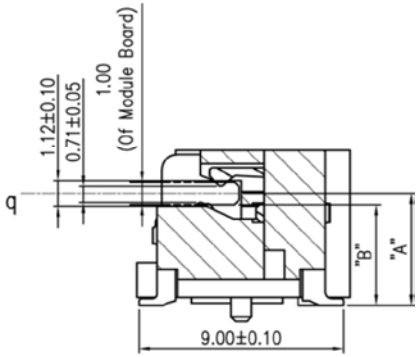

A–A (4 : 1)

SPECIFICATIONS

Housing Material:	High temperature plastic UL94V-0
Contact Material:	Brass
Contact Area:	Gold Flash, 3u" and 15u" gold plating
Solder:	Lead Free

Series	Type	Standoff	Color	Plating
CMPCI	199A	XX	XX	XX
Mini PCI socket	Type 199A	52=5.2mm 56=5.6 68=6.8 80=8.0 92=9.2	BK=Black BG=Beige	GD=Gold Flash GD3=Gold 3µ" GD15=Gold 15µ"

RoHS compliant

Rev.	Description	Date	Approved	Drawing	Name	Date
				Approved	Howard	05/04/07
				Checked	Lizzy	05/04/07
				Drawn	Tina	05/04/07
				0.0 ± 0.35	0.00 ± 0.20	Angles ± 3'
				UNIT: mm		

Central Components Manufacturing
440 Lincoln Blvd., Middlesex, New Jersey 08846
Phone 732 469-5720 888 288-5152 Fax 732 469-1919

Part No.: **CMPCI-119A-XX-XX-XX**

Description: Mini PCI Express Socket