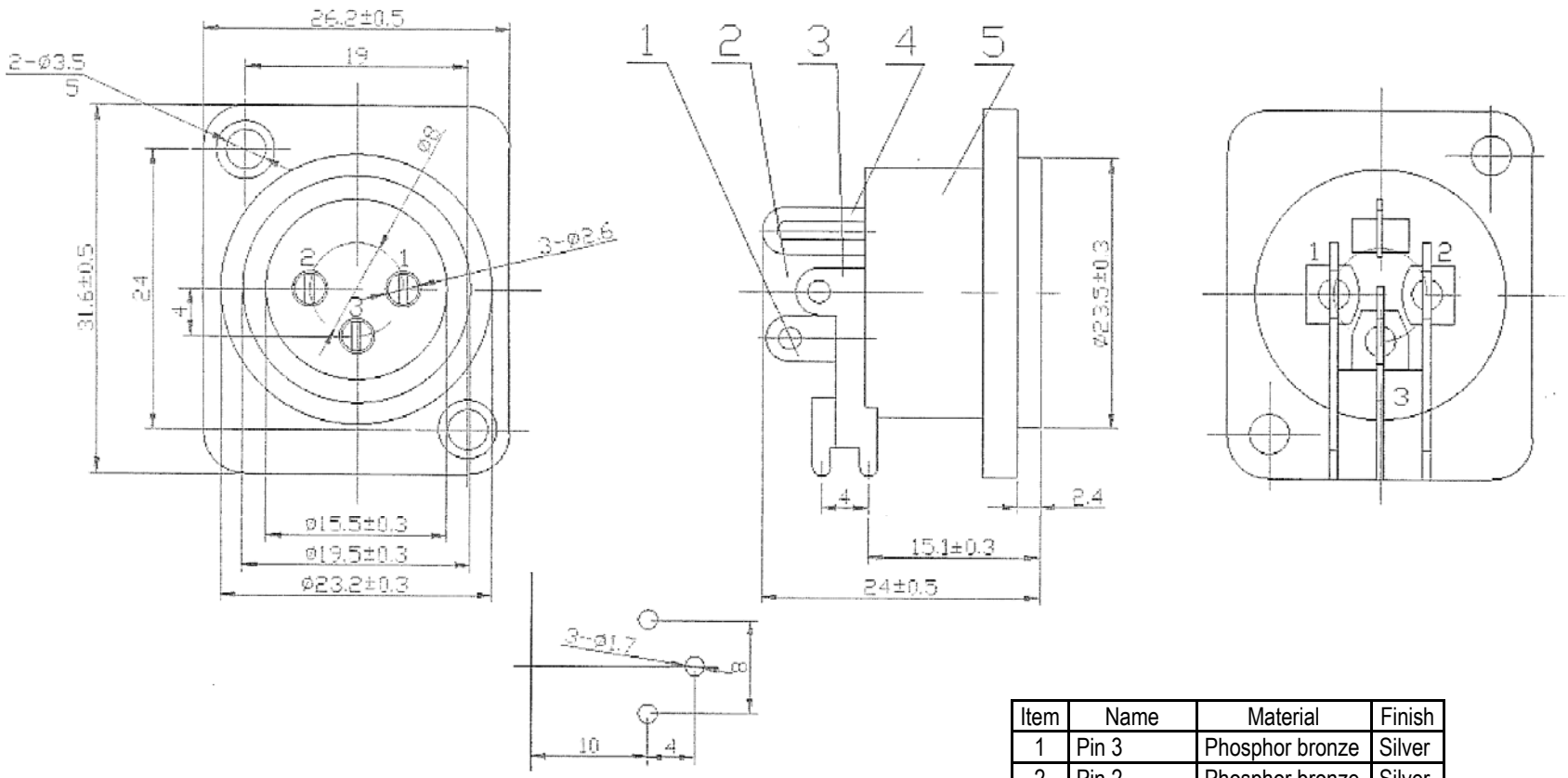

Item	Name	Material	Finish
1	Pin 3	Phosphor bronze	Silver
2	Pin 2	Phosphor bronze	Silver
3	Pin 1	Phosphor bronze	Silver
4	Grounding	Phosphor bronze	Silver
5	Plastic shell	Nylon	

RoHS compliant

Rev.	Description	Date	Approved	Drawing	Name	Date
				Approved	Howard	08/10/99
				Checked	Lizzy	08/10/99
				Drawn	Tina	08/10/99
				0.0 ± 0.35	0.00 ± 0.20	Angles ± 3'
				UNIT: mm		

Central Components Manufacturing
440 Lincoln Blvd., Middlesex, New Jersey 08846
Phone 732 469-5720 888 288-5152 Fax 732 469-1919

Part No.: **CLR-SVP-651P-R**

Description: XLR type connector, female, solder type