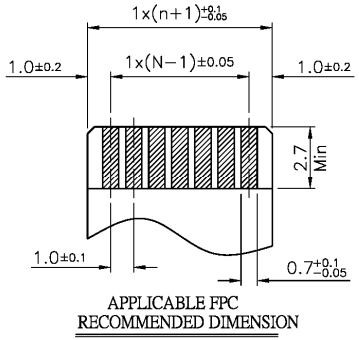

APPLICABLE FPC
RECOMMENDED DIMENSION
(THICKNESS:0.3±0.05)

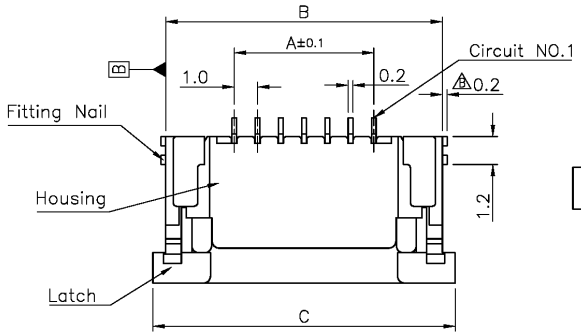

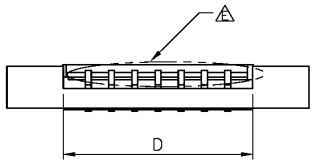

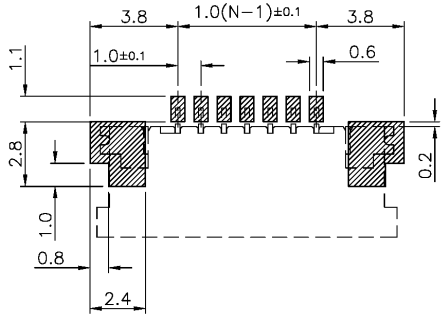

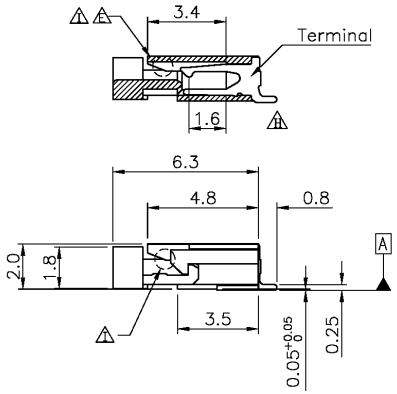

SPECIFICATIONS

Current Rating:	1 A AC(rms)/DC
Voltage:	125 V AC(rms)/DC
Housing material:	High temperature thermoplastic
Terminal material:	Copper alloy
Fitting nail material:	Copper alloy
Contact plating:	Tin over nickel
Contact Resistance:	20 mΩ max.
Insulation Resistance:	100 MΩ min.
Coplanarity:	0.1mm max. based on datum A
True position:	0.1mm max. based on datum B
Withstanding:	500 V AC/rms
Operating Temp:	-20ºC ~ +85ºC

CKT	Dim A	Dim B	Dim C	Dim D	CKT	Dim A	Dim B	Dim C	Dim D
4	3.0	8.9	10.0	5.15	19	18.0	23.9	25.0	20.15
5	4.0	9.9	11.0	6.15	20	19.0	24.9	26.0	21.15
6	5.0	10.9	12.0	7.15	21	20.0	25.9	27.0	22.15
7	6.0	11.9	13.0	8.15	22	21.0	26.9	28.0	23.15
8	7.0	12.9	14.0	9.15	23	22.0	27.9	29.0	24.15
9	8.0	13.9	15.0	10.15	24	23.0	28.9	30.0	25.15
10	9.0	14.9	16.0	11.15	25	24.0	29.9	31.0	26.15
11	10.0	15.9	17.0	12.15	26	25.0	30.9	32.0	27.15
12	11.0	16.9	18.0	13.15	27	26.0	31.9	33.0	28.15
13	12.0	17.9	19.0	14.15	28	27.0	32.9	34.0	29.15
14	13.0	18.9	20.0	15.15	29	28.0	33.9	35.0	30.15
15	14.0	19.9	21.0	16.15	30	29.0	34.9	36.0	31.15
16	15.0	20.9	22.0	17.15	31	30.0	35.9	37.0	32.15
17	16.0	21.9	23.0	18.15	32	31.0	36.9	38.0	33.15
18	17.0	22.9	24.0	19.15					

Series	Pitch	Type	Contacts	Style	Plating	Options
CFPC	050	85201	XX	RB	XX	XX
FPC connector	050=0.50mm 030=0.30mm 100=1.00mm 125=1.25mm	85201 type	04—32	R=Right angle V=Vertical U=Upper contacts B=Bottom contacts	TN=Tin over nickel GD1=Gold 1μ" over nickel GD3=Gold 3μ" over nickel	[blank]=None TR=Tape & reel pkg TB=Tube pkg

RoHS compliant

Rev.	Description	Date	Approved
A	Specs	6/19/08	Greg

Drawing	Name	Date
Approved	Howard	09/29/06
Checked	Lizzy	09/29/06
Drawn	Tina	09/29/06

0.0 ± 0.35 0.00 ± 0.20 Angles ± 3'

UNIT: mm

Central Components Manufacturing
440 Lincoln Blvd., Middlesex, New Jersey 08846
Phone 732 469-5720 888 288-5152 Fax 732 469-1919

Part No.: **CFPC-100-85201-XX-RT-XX-XX**

Description: FPC connector, 0.50mm pitch, right-angle, top contacts