CED-61108-01

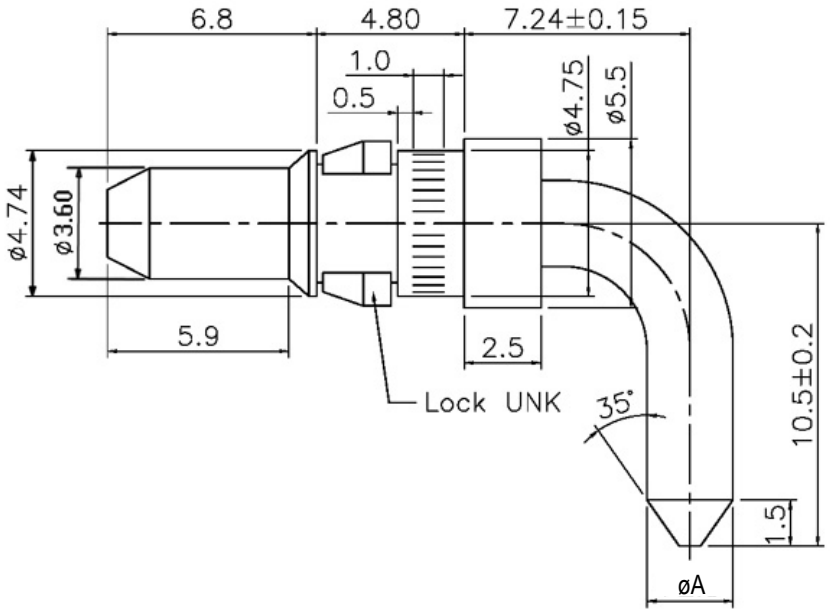

CED-61108-02

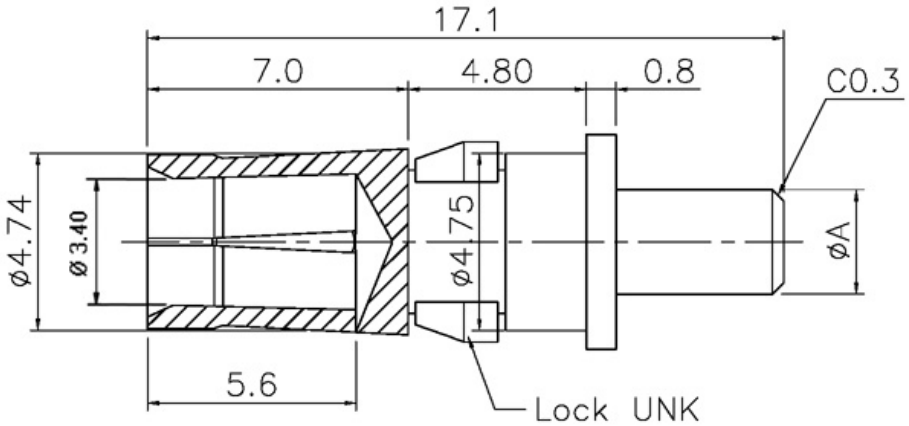

SPECIFICATIONS

Contact material:	Brass, gold plated
Lock link material:	Brass, nickel plated

Series	Type	Gender	Dimension øA	Plating Options
CED	61108	XX	X	GDXX
DIN 41612	Power contact	01=R/A male 02=Straight female	2=ø2.85mm (.110”), 20 amps 4=ø3.75mm (.148”), 40 amps	GD=Gold flash GD10=10µ” gold GD15=15µ” gold GD20=20µ” gold GD30=30µ” gold

RoHS compliant

Rev.	Description	Date	Approved

Drawing	Name	Date
Approved	Howard	05/07/07
Checked	Lizzy	05/07/07
Drawn	Tina	05/07/07

0.0 ± 0.35 0.00 ± 0.20 Angles ± 3’

UNIT: mm

Central Components Manufacturing
440 Lincoln Blvd., Middlesex, New Jersey 08846
Phone 732 469-5720 888 288-5152 Fax 732 469-1919

Part No.: **CED-61108-XX-X-GDXX**

Description: DIN 41612 power contact