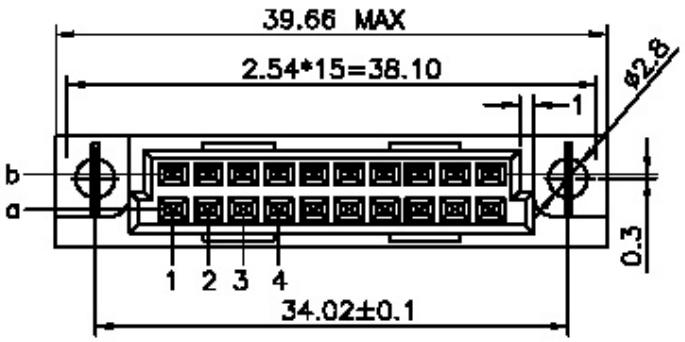

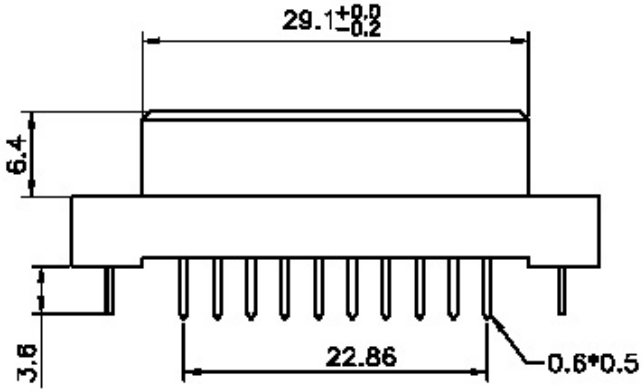

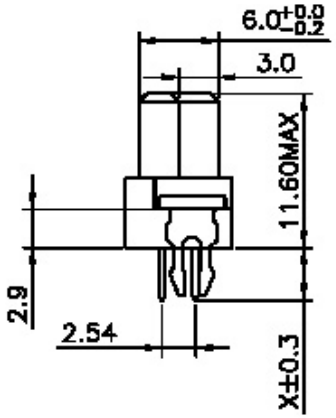

SPECIFICATIONS

Current rating:	2 amps
Contact material:	Brass
Contact resistance:	30 milliohms max. at 100 milliamps DC
Housing material:	PBT, 30% glass filled, UL94V-0
Insulation resistance:	1,000 megohms min. at 500VDC
Withstanding:	1,000VAC for 1 min.
Operating temperature:	-55°C to +105°C

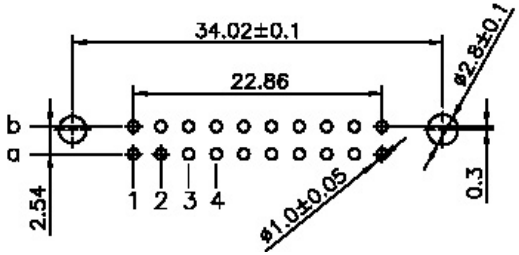

PC Board Layout
(Tolerance: ±0.05

- All mounting types available with boardlocks (BL)
- Straight (A mount) type available in press fit (PF)
- All types available with first mate last break (FMLB)

RoHS compliant

Pitch	Position	Rows with contacts
2.54mm	20	a b -
	10	a - -

Series	Gender	Mounting	Contacts	Pin Length (PF)	Pitch	Loaded Rows	Plating	Type	Options
CED	X	X	XX	XX	XX	X	SGX	B3	XX
DIN41612	1-B=Male right angle 2-A=Female straight		10, 20 (see chart)	A1=4.0mm (PF=4.6mm) A2=2.5mm (PF=6.3mm) A3=13mm (PF=13mm) (str only) A4=17mm (PF=17mm) (str only)	B1=2.54mm	1=A 2=B 4=A & B	SG=Selective gold 1=30μ" (Level 1) 2=10-20μ" (Level 2) 3=Flash (Level 3)	B3 type (See also B, C, Q & R)	[Blank]=None PF=Press fit BL=Boardlocks HT=High temp. material

Rev.	Description	Date	Approved

Drawing	Name	Date
Approved	Howard	08/10/99
Checked	Lizzy	08/10/99
Drawn	Tina	08/10/99

0.0 ± 0.35 0.00 ± 0.20 Angles ± 3'

UNIT: mm

Central Components Manufacturing
440 Lincoln Blvd., Middlesex, New Jersey 08846
Phone 732 469-5720 888 288-5152 Fax 732 469-1919

Part No.: **CED-2-A-XX-XX-B1-X-SGX-B3-XX**

Description: DIN 41612, B3 type, female