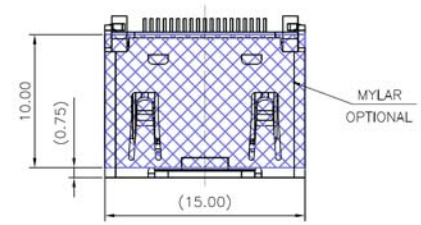

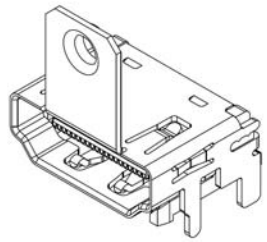

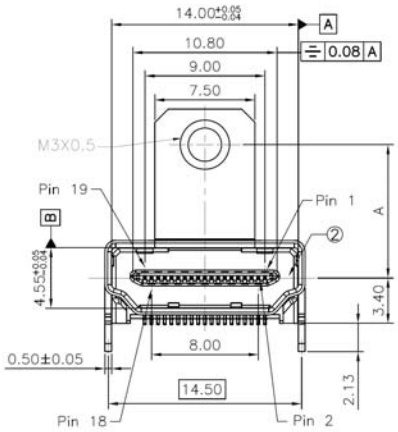

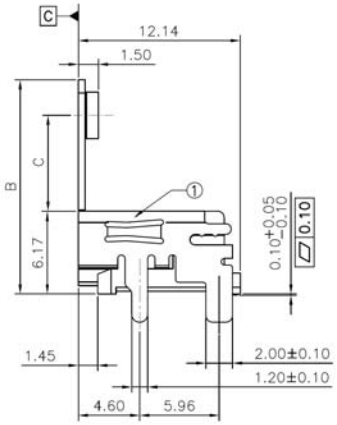

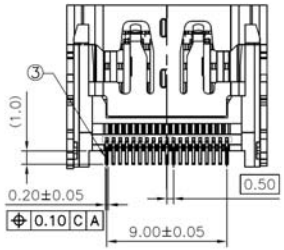

SPECIFICATIONS

Insertion Force:	44.1 N Max
Withdrawal Force:	9.8 N Min.
Current Rating:	.05A Min.
Voltage Rating:	40V AC (rms)
Withstanding Voltage:	500 Volts AC (unmated) 300 Volts AC (mated)
Insulation Resistance:	100Mohm Min. (unpated); 10Mohm Min. (mated)
Contact Resistance:	30 Milliohms Max.
Operating Temp:	-25C to +85C

Dimensions			
Flange	A	B	C
N	9.975	16.04	7.20
M	7.975	14.04	5.20

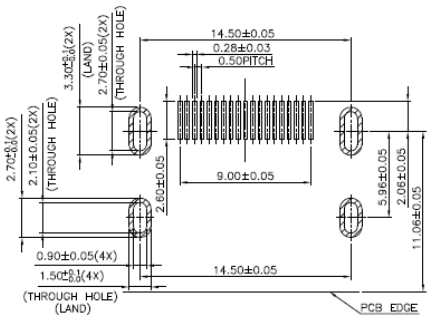

RECOMMENDED P.C.B. LAYOUT (T:1.20mm)
TOLERANCE UNSPECIFIED ±0.05mm

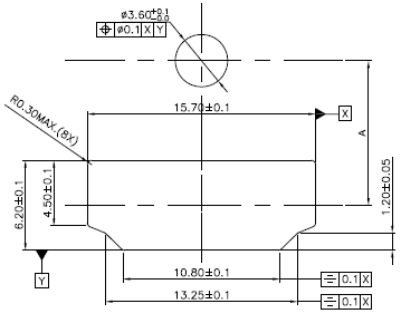

RECOMMENDED PANEL CUT OUT DIMENSION

Series	Type	Contact Plating	Shell Plating	Shell Material	Package	Flange Dimensions
HDMI	FSM	SGX	X	X	XX	X
HDMI connector	Female surface mount	SG=Selective Gold X=Flash if Blank, 10,15,30u”	N=Nickel (std) G=Gold	B=Brass S=SPCC	Blank=Tray TR=Tape & Reel TRM=Tape & Reel with Mylar	Blank=No Flange M,N (see chart)

RoHS compliant

Rev.	Description	Date	Approved	Drawing	Name	Date
				Approved	Howard	11/30/11
				Checked	Lizzy	11/30/11
				Drawn	Tina	11/30/11
				0.0 ± 0.35	0.00 ± 0.20	Angles ± 3’
				UNIT: mm		

Central Components Manufacturing
440 Lincoln Blvd., Middlesex, New Jersey 08846
Phone 732 469-5720 888 288-5152 Fax 732 469-1919

Part No.: HDMI-FSM-SGX-X-X-XX-X

Description: HDMI SMT Type Connector