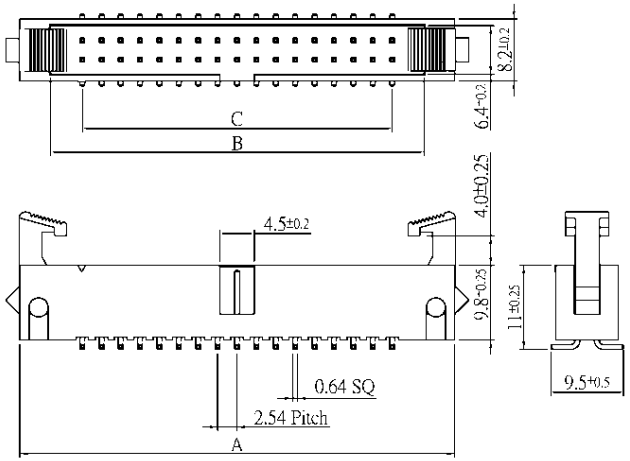

SPECIFICATIONS
Contact material: Brass
Contact plating: Gold over nickel
Insulator material: PBT

Dimensions			
Pos.	A	B	C
10	17.96	21.52	10.16
14	23.04	26.60	15.24
16	25.58	29.14	17.78
20	30.66	34.22	22.86
24	35.74	39.30	27.94
26	38.28	41.84	30.48
30	43.36	46.92	35.56
34	48.44	52.00	70.64
40	56.06	59.62	48.26
50	68.76	72.32	60.96
60	94.16	97.72	73.66
64	99.24	102.8	78.74

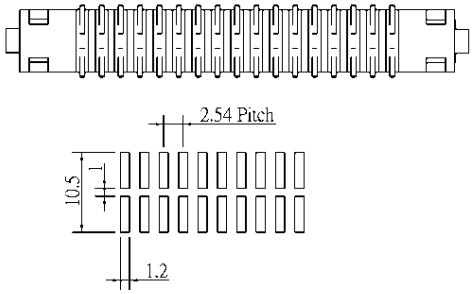

Recommended PC Board Layout

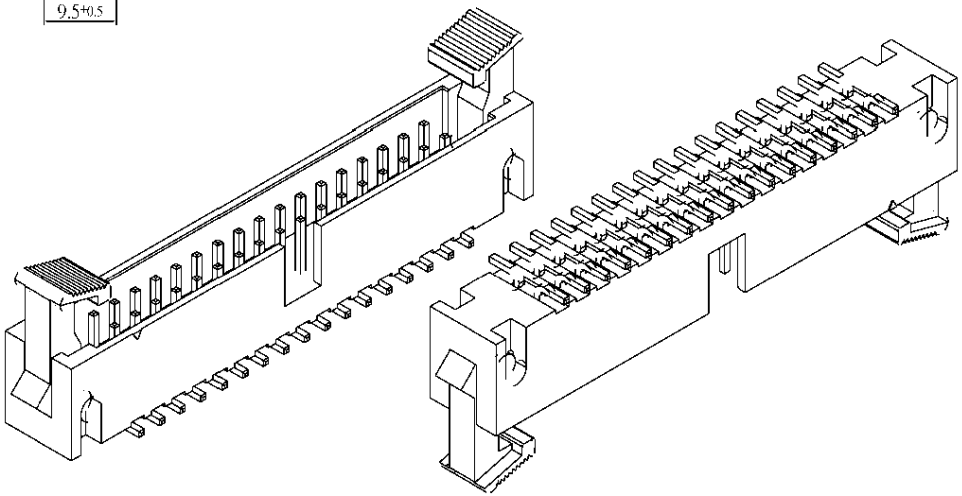

Series	Positions	Mounting	Plating	Latches	Options
BHD	XX	XX	XX	XX	XX
Box header	See chart	ST=Straight RA=Right angle	GD=Gold SG=Selective gold TN=Tin	SL=Short latch (3.9mm) LL=Long latch (7.68mm) NL=No latch	[blank]=None SM=Surface mount SPL=Special pin length

RoHS compliant

Rev.	Description	Date	Approved

Drawing	Name	Date
Approved	Howard	08/10/03
Checked	Lizzy	08/10/03
Drawn	Tina	08/10/03
0.0 ± 0.35	0.00 ± 0.20	Angles ± 3'
	UNIT: mm	

Central Components Manufacturing
440 Lincoln Blvd., Middlesex, New Jersey 08846
Phone 732 469-5720 888 288-5152 Fax 732 469-1919

Part No.: **BHD-XX-ST-XX-SL-SM**

Description: Box header, surface mount with end latches