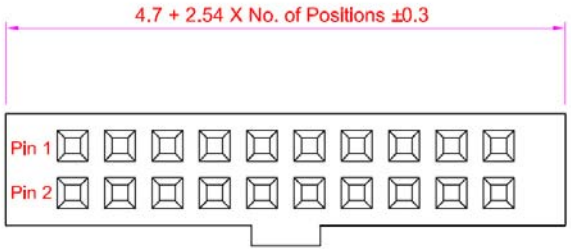


Recommended
P.C. Board Hole Layout

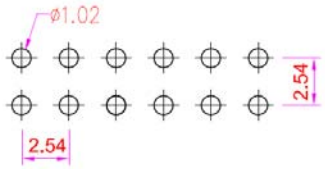


SPECIFICATIONS

| | |
|---|---|
| Current Rating: | 3 Amps |
| Insulation Resistance: | 1000MΩ Min. |
| Withstanding: | 600VAC |
| Contact Resistance: | 20mΩ Max. |
| Operating Temp: | -40°C to +105°C |
| Contact Material: | Brass |
| Insulator Material: | Polyester, UL94V-0 |

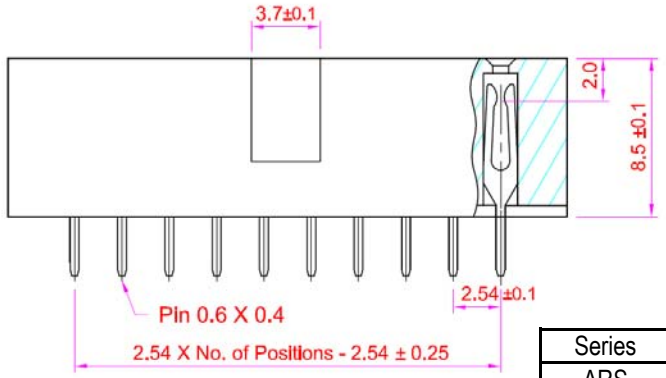


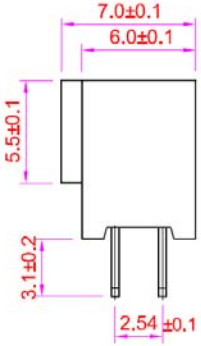


| Series | Rows | Options | Contacts | Plating | Special Options |
|---|---|---|---|---|---|
| ARS | XX | XX | XX | XX | XX |
| Receptacle strip | 01=Single row<br>02=Dual row<br>03=Single row R/A<br>04=Dual row R/A | [blank]=None<br>DE=Dual entry<br>BE=Bottom entry<br>SE=Side entry<br>P=Polarized | Single row: 3-40<br>Dual row: 6-72 | TN=Tin<br>SGXX=Selective gold<br>GDXX=Gold<br>XX=Flash if blank; 15, 30, 50µ" | [blank]=None<br>SM=Surface mount<br>RT=Retention tails<br>P4C=End Position Removed |

RoHS compliant

| Rev. | Description | Date | Approved |
|---|---|---|---|
| A | DWG | 10/30/14 | GL |
| | | | |
| | | | |
| | | | |
| | | | |

| Drawing | Name | Date |
|---|---|---|
| Approved | Howard | 02/23/10 |
| Checked | Lizzy | 02/23/10 |
| Drawn | Tina | 02/23/10 |

0.0 ± 0.35 0.00 ± 0.20 Angles ± 3'

UNIT: mm


**Central Components Manufacturing**
440 Lincoln Blvd., Middlesex, New Jersey 08846
Phone 732 469-5720 888 288-5152 Fax 732 469-1919


Part No.: ARS-02-P-XX-XX-XX

Description: 2.54mm Female Header, Dual Row DIP Type, Base 8.50H